ILLUSTRATED PARTS LIST

KUBOTA

MODEL V1902-BG1-PTSI-2

DIESEL ENGINE

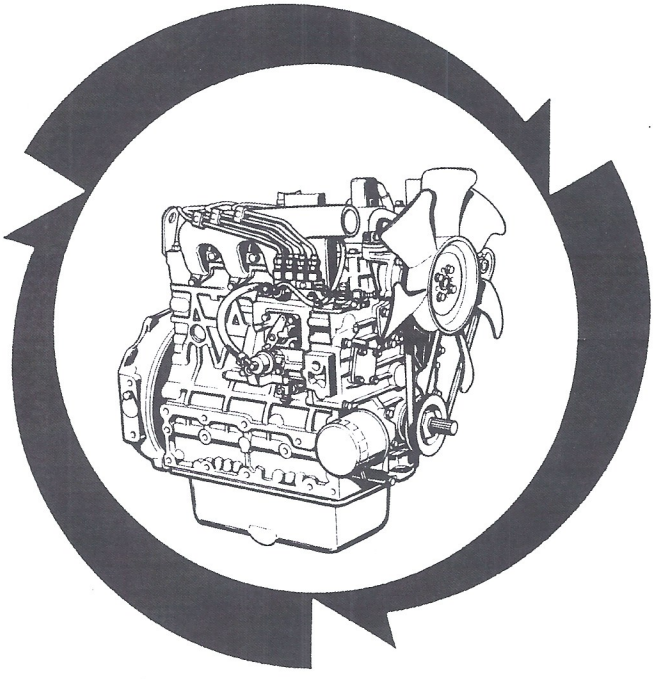

Kubota

97898-64650
JUL. 2004

NOTICE

This Parts List is for the following purposes.

1. When ordering parts, check with this Parts List to confirm the part number and the name of parts.
2. When making repairs, refer to the illustrations in this Parts List.
3. This Parts List is subject to change without notice.

ENGINE	
MODEL	CODE No.
V1902-BG1-PTSI-2	19042-11000

INSTRUCTIONS

① ②

0102 PISTON AND CRANKSHAFT 〔B〕

⑩ → S.No. ; A:<=15000, B:14000 to 15000

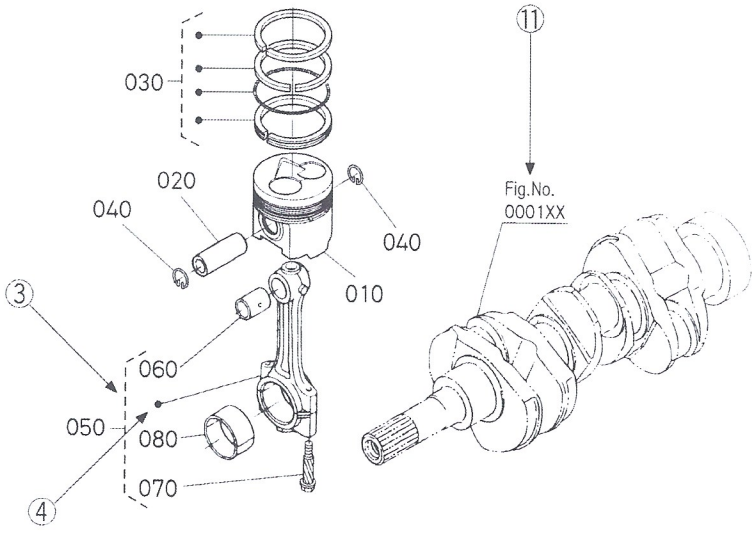

⑤ ⑥ ⑦ ⑧ ⑥ ⑨

A:XXXX, B:XXXX

REF. No	PART No.	PART NAME	Q'TY/S.No. A	Q'TY/S.No. B	I.C.	REMARKS
010	15800-0000-0	PISTON	1 <=15000	1 <=15000		〔Example−1〕
010	15800-0000-2	PISTON	1 >=15001	1 >=15001	←	
020	15800-1000-0	PIN,PISTON	1 <=15000	1 <=15000		
020	15800-1000-2	PIN,PISTON	1 >=15001	1 >=15001	≠	〔Example−2〕
030	15800-2000-0	ASSY PISTON RING	1 <=15000	1 <=15000		
030	15830-2000-0	ASSY PISTON RING	1 >=15001	1 >=15001	↔	〔Example−3〕

① Fig. No. ..... Represents No. corresponding to each group name.

② Specifications ..... The types and destinations of sister models are indicated. These indications are given to tell their relevant pages in this book.
(for sister models)

③ Components ..... The components of an assembly are identified by a bracket of dotted lines.

④ Point ..... Indicates that the parts is not sold independently.
The assembly (Ref.No.050) containing the part needs to be ordered.

⑤ REF. No. ..... Reference numbers are assigned to parts in the illustration.The code number of a part in the illustration can be identified by referring to the same reference number in the parts list.

⑥ Model name ..... The name of the basic model is indicated in this column. Other applicable models are indicated on the "REMARKS" column ⑨.

⑦ S. No. ..... Indicates a group of serial numbers to which a design change is applied.
(serial No.)

Engine Serial No. .. Old Serial No.

654321 ... 6 digits all in numerals.

New Serial No.

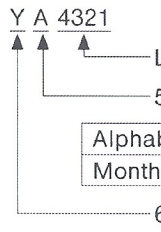

Alphabetical letter	A,B	C,D	E,F	G,H	J,K	L,M	N,P	Q,R	S,T	U,V	W,X	Y,Z
Month	1	2	3	4	5	6	7	8	9	10	11	12

Alphabetical letter or numerals	W	X	Y	1	2	3	4	5	6	7	8	9	A	B	C
Year	'98	'99	2000	'01	'02	'03	'04	'05	'06	'07	'08	'09	'10	'11	'12

⑧ I. C. ..... Indicates the interchangeability of parts due to design change.
(interchangeability)

Example-1 ..... ← indicates that a new part can replace an old part, but not vice versa.
15800-0000-0 is applicable to the first serial number to S. No. 15000.
15800-0000-2 is applicable to the first serial number and above.

Example-2 ..... ≠ indicates that the new and old parts are not interchangeable.
15800-1000-0 is applicable to the first serial number to S. No. 15000.
15800-1000-2 is applicable to S. No. 15001 and above.

Example-3 ..... ↔ indicates that the new and old parts are interchangeable. Both 15800-2000-0 and 15830-2000-0 are applicable to the first serial number and above.

⑨ REMARKS 1 ..... In this column, enter other applicable model names, dimensions and other special items. The following symbols and abbreviations are used throughout this book.
29＊12.00-15 ... Tire size sq.m .... m^2 sq.mm .... mm^2
cu.m .... m^3 cu.mm ... mm^3 D ... Diameter L .... Length

⑩ REMARKS 2 ..... The following expressions are used in NOTE for each group.
Machines' serial numbers are indicated as follows.
〈=15000 ..... Serial number below 15000.
〉=15001 ..... Serial number above 15001.
14000 to 15000 ..... Serial number 14000 to 15000.
For some models, the above expressions may also be used REMARKS 1 ⑨.

⑪ Fig. No. ..... Indicates the numbers of figures for the parts that are shown in virtual images.
(virtual images)
A figure number with XX means that there are two or more figures depending on the sister models.

CONTENTS

[V1902-BG1-PTSI-2]

0001 CRANKCASE 1
0002 OIL PAN 2
0003 CYLINDER HEAD 3
0004 GEAR CASE 4
0005 HEAD COVER 6
0006 OIL FILTER 7
0007 DIPSTICK AND GUIDE 8
0100 MAIN BEARING CASE 9
0101 CAMSHAFT AND IDLE GEAR SHAFT 10
0102 PISTON AND CRANKSHAFT 11
0103 FLYWHEEL 12
0105 FUEL CAMSHAFT AND GOVERNOR SHAFT 13
0200 ENGINE STOP LEVER 14
0202 INJECTION PUMP 15
0204 GOVERNOR 16
0205 SPEED CONTROL PLATE 17
0206 NOZZLE HOLDER AND GLOW PLUG 18
0207 NOZZLE HOLDER (COMPONENT PARTS) 19
0300 FUEL FILTER 20
0301 FUEL PUMP (MECHANICAL) 21
0402 ALTERNATOR AND PULLEY 22
0403 ALTERNATOR (COMPONENT PARTS) 23
0404 STARTER 24
0405 STARTER (COMPONENT PARTS) 25
0406 OIL SWITCH AND PLUG 26
0500 WATER FLANGE AND THERMOSTAT 27
0501 WATER PUMP 28
0504 FAN BOLT 29
0505 RESERVE TANK 30
0600 VALVE AND ROCKER ARM 31
0601 INLET MANIFOLD 32
0602 EXHAUST MANIFOLD 33
0808 ACCESSORIES AND SERVICE PARTS 34
0809 LABEL 35
■ NUMERICAL INDEX 36

0001 CRANKCASE

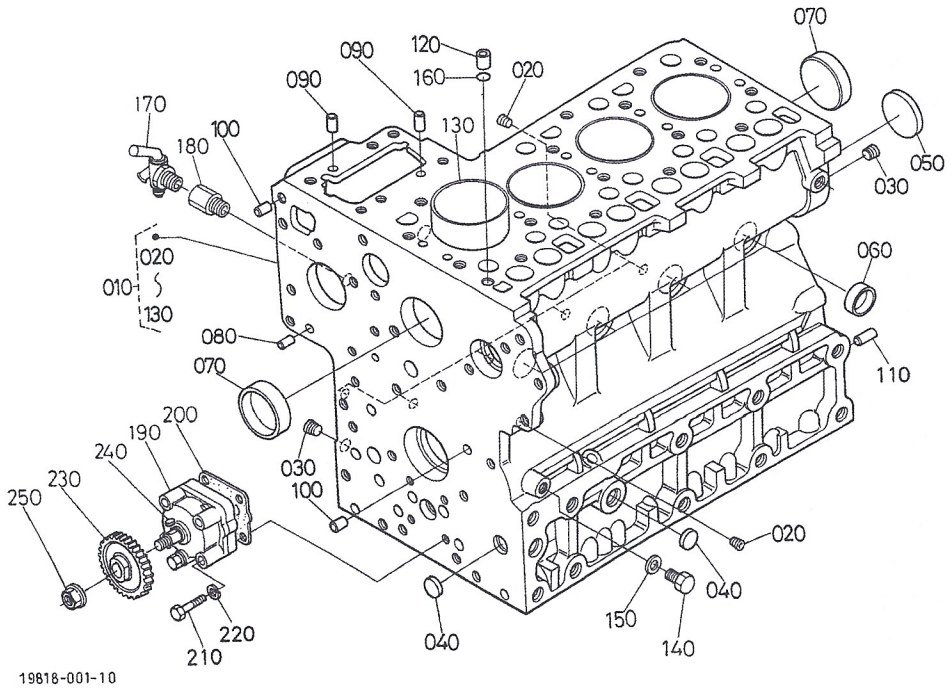

A:V1902-BG1-PTSI-2

REF. No.	PART No.	PART NAME	Q'TY/S. No.		I. C.	REMARKS
			A	B		
010	19075-0101-0	COMP. CRANKCASE	1	-		
020	15521-9602-0	PLUG	6	-		
030	15521-9603-0	PLUG	2	-		
040	17391-9616-0	PLUG, EXPANSION	3	-		
050	16271-9616-0	PLUG, EXPANSION	1	-		
060	15221-0338-0	CAP, SEALING	6	-		
070	15221-0339-0	CAP, SEALING	2	-		
080	05012-00408	PIN, STRAIGHT	2	-		
090	05012-00609	PIN, STRAIGHT	2	-		
100	05012-00612	PIN, STRAIGHT	2	-		
110	05012-01018	PIN, STRAIGHT	1	-		
120	15221-3365-0	PIN, PIPE	1	-		
130	15521-0231-0	LINER, CYLINDER	4	-		
140	15469-3361-0	PLUG	1	-		
150	15021-3366-0	GASKET	1	-		
160	15221-3370-0	O RING	1	-		
170	15575-7310-0	COCK, DRAIN	1	-		
180	15291-7316-0	JOINT, DRAIN COCK	1	-		
190	15471-3501-2	ASSY PUMP, OIL	1	-		
200	1A021-3515-0	GASKET, OIL PUMP	1	-		
210	01053-50650	BOLT	4	-		
220	04512-60060	WASHER, SPRING	4	-		
230	19202-3566-0	GEAR, OIL PUMP DRIVE	1	-		
240	05712-00410	KEY, FEATHER	1	-		
250	15221-3568-2	NUT, FLANGE	1	-		

0002 OIL PAN

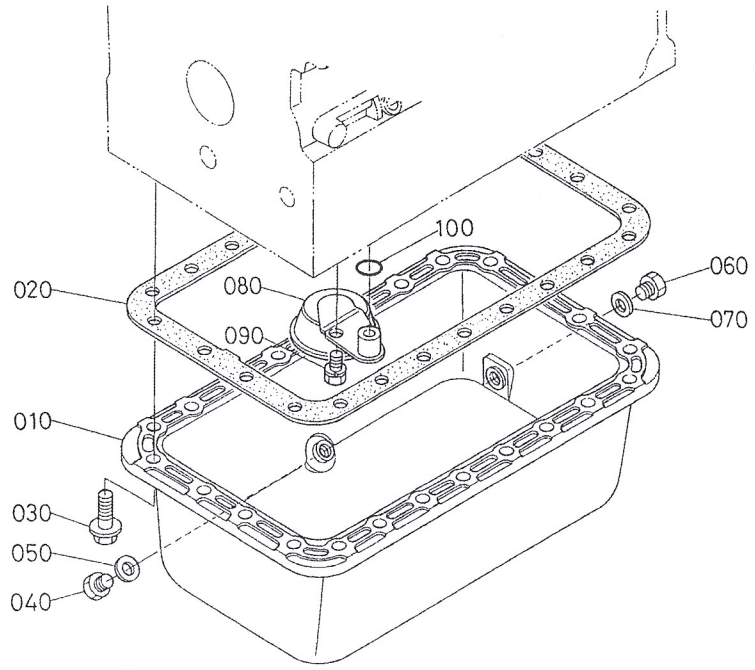

17109-015-10

A:V1902-BG1-PTSI-2

REF. No.	PART No.	PART NAME	Q'TY/S. No. A	Q'TY/S. No. B	I. C.	REMARKS
010	15434-0161-3	OIL PAN	1	-		
020	1G780-0162-0	GASKET, OIL PAN	1	-		
030	17333-9101-3	BOLT, FLANGE	24 <=5R9999	-		#
030	1G861-9101-0	BOLT, FLANGE	24 >=5S0001	-	←	#
040	15221-3375-0	PLUG	1	-		
050	6C090-5896-0	GASKET	1	-		
060	15951-3375-0	PLUG, DRAIN	1	-		
070	04724-00160	GASKET	1	-		
080	15628-3211-0	FILTER, OIL	1	-		
090	01123-60816	BOLT	1	-		
100	04816-00160	O RING	1	-		

↔ Interchangeable; ≠ not interchangeable; ← new for old; → old for new

0003 CYLINDER HEAD

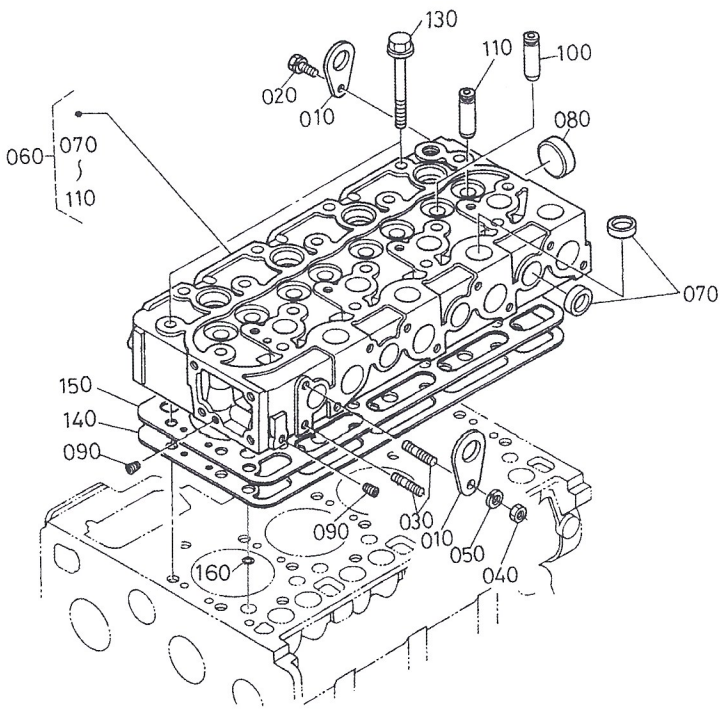

19042-006-10

A:V1902-BG1-PTSI-2

REF. No.	PART No.	PART NAME	Q'TY/S. No.		I. C.	REMARKS
			A	B		
010	15221-0175-0	HOOK, ENGINE	2	-		
020	01123-60816	BOLT	1	-		
030	15471-9153-0	STUD	2	-		
040	02156-50080	NUT	1	-		
050	04512-60080	WASHER, SPRING	1	-		
060	15476-0304-3	COMP. CYLINDER HEAD	1	-		
070	15221-0337-0	CAP, SEALING	12	-		
080	15221-0349-0	CAP, SEALING	1	-		
090	15261-9601-0	PLUG	2	-		
100	17321-1358-0	GUIDE, INLET VALVE	4	-		
110	17321-1356-0	GUIDE, EXHAUST VALVE	4 <=5F9999	-		#
110	1C010-1356-0	GUIDE, VALVE, EXHAUST	4 >=5G0001	-	↔	#
120	----	BLANK	-	-		
130	19202-0345-0	BOLT, CYLINDER HEAD	18	-		
140	15834-0331-0	GASKET, CYL. HEAD. NA	1	-		
150	15476-0332-0	SHIM, CYL. HEAD GASKET	1	-		
160	15221-3370-0	O RING	1	-		

↔ Interchangeable; ≠ not interchangeable; ← new for old; → old for new

0004 GEAR CASE

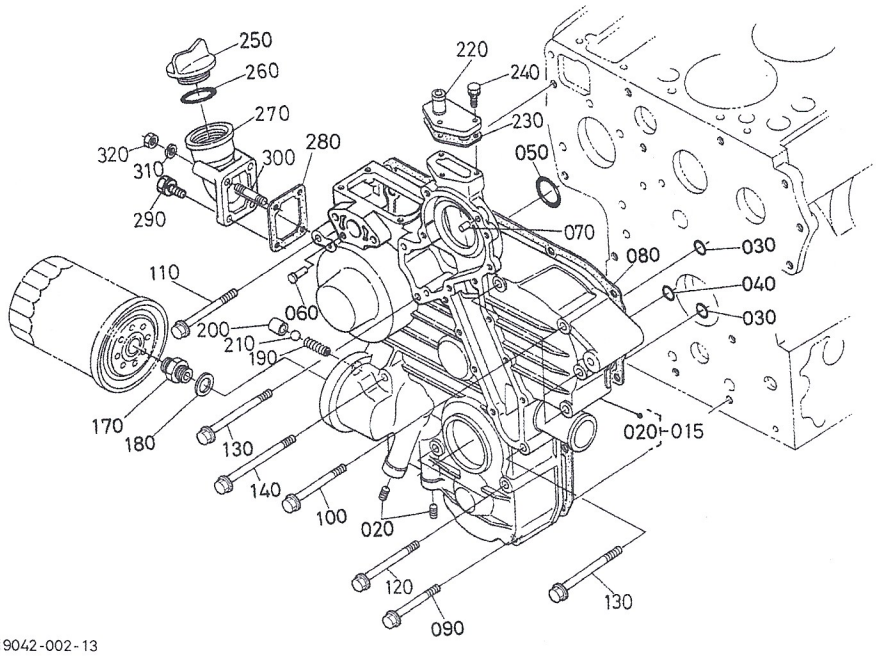

19042-002-13

OLD PART

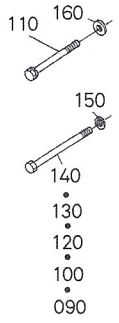

19042-801-10

A:V1902-BG1-PTSI-2

REF. No.	PART No.	PART NAME	Q'TY/S. No. A	Q'TY/S. No. B	I. C.	REMARKS
010	----	BLANK	-	-		#
015	17182-0402-0	COMP. CASE, GEAR	1	-		
020	16851-9601-0	PLUG	2	-		
030	04817-00150	O RING	2	-		
040	04817-00200	O RING	1	-		
050	04817-00360	O RING	1	-		
060	19818-5628-0	PIN, START SPRING	1	-		
070	05012-00612	PIN, STRAIGHT	2	-		
080	17089-0413-0	GASKET, GEAR CASE	1	-		
090	01123-50860	BOLT	2 <=5V9999	-		#
090	16467-9101-0	BOLT, FLANGE	2 >=5W0001	-	≠	#
100	01153-50870	BOLT	5 <=5V9999	-		#
100	1A021-9103-0	BOLT, FLANGE	5 >=5W0001	-	≠	#
110	17367-9103-0	BOLT	1 <=5V9999	-		#
110	16467-9103-0	BOLT, FLANGE	1 >=5W0001	-	≠	#
120	01153-50880	BOLT	2 <=5V9999	-		#
120	16467-9102-0	BOLT, FLANGE	2 >=5W0001	-	≠	#
130	17367-9102-0	BOLT	3 <=5V9999	-		#
130	01754-50885	BOLT, FLANGE	3 >=5W0001	-	≠	#
140	01153-50895	BOLT	2 <=5V9999	-		#
140	16424-9101-0	BOLT, FLANGE	2 >=5W0001	-	≠	#
150	04512-60080	WASHER, SPRING	10 <=5V9999	-		#
150	04512-60080	WASHER, SPRING	6 >=5W0001	-		#
160	04012-50080	WASHER, PLAIN	1 <=5W0001	-		#
170	1A021-3229-0	JOINT, PIPE	1	-		
180	1G790-3230-2	COLLAR, VALVE SEAT	1	-		
190	15241-3695-0	SPRING	1	-		
200	15521-3693-0	SEAT, VALVE	1	-		
210	07715-03213	BALL	1	-		
220	15521-7332-0	FLANGE, WATER RETURN	1	-		

↔ Interchangeable; ≠ not interchangeable; ← new for old; → old for new

0004 GEAR CASE

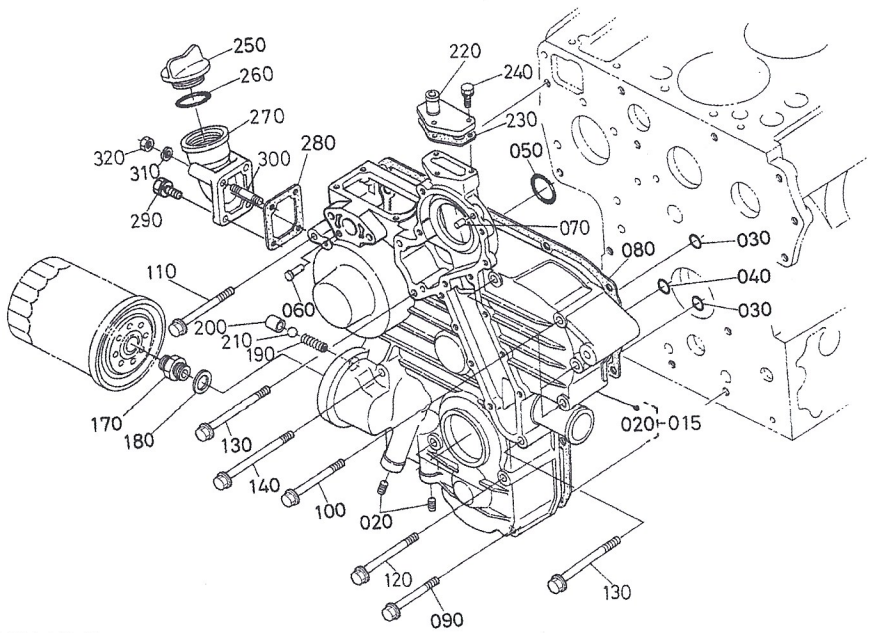

19042-002-13

OLD PART

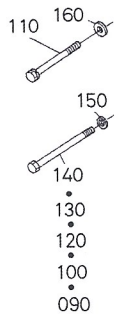

19042-801-10

A:V1902-BG1-PTSI-2

REF. No.	PART No.	PART NAME	Q'TY/S. No. A	Q'TY/S. No. B	I. C.	REMARKS
230	1A021-7333-0	GASKET, RETURN FLANGE	1	-		
240	01023-50620	BOLT	3	-		
250	15221-3314-0	PLUG, OIL FILLER	1	-		
260	04816-50300	O RING	1	-		
270	16414-3311-0	FLANGE, OIL FILLER	1	-		
280	15472-5455-0	GASKET NA	1	-		
290	01123-50820	BOLT	2	-		
300	17182-9151-0	STUD	2	-		
310	04512-60060	WASHER, SPRING	2	-		
320	02056-50060	NUT	2	-		

↔ Interchangeable; ≠ not interchangeable; ← new for old; → old for new

0005 HEAD COVER

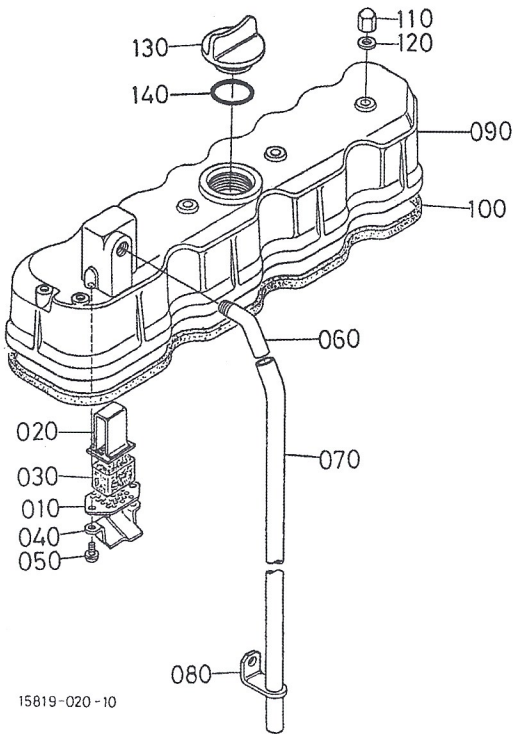

A:V1902-BG1-PTSI-2

REF. No.	PART No.	PART NAME	Q'TY/S. No.		I. C.	REMARKS
			A	B		
010	15521-0514-0	PLATE, B/THER ELEMENT	1	–		
020	15521-0515-0	PLATE, B/THER ELEMENT	1	–		
030	15521-0567-0	ELEMENT, BREATHER	1	–		
040	15521-0537-0	OIL SHIELD, BREATHER	1	–		
050	03034-50510	SCREW, WITH WASHER	2	–		
060	15521-0555-0	JOINT, BREATHER PIPE	1	–		
070	15521-0551-0	PIPE, BREATHER	1	–		
080	15401-0558-0	CLAMP, PIPE	1	–		
090	15434-1451-0	COVER, CYL. HEAD	1	–		
100	15471-1452-0	GASKET, HEAD COVER	1	–		
110	15451-9233-0	NUT	4	–		
120	15021-3366-0	GASKET	4	–		
130	15221-3314-0	PLUG, OIL FILLER	1	–		
140	04816-50300	O RING	1	–		

⟷ Interchangeable: ≠ not interchangeable: ⟵ new for old: ⟶ old for new

0006 OIL FILTER

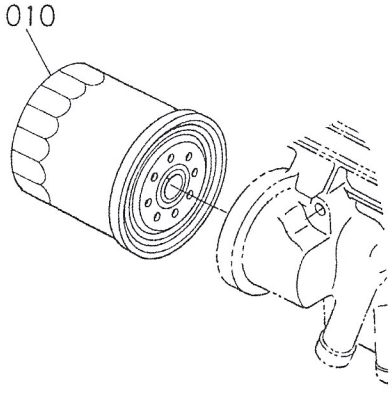

16641-004-10

A:V1902-BG1-PTSI-2

REF. No.	PART No.	PART NAME	Q'TY/S. No.		I. C.	REMARKS
			A	B		
010	16414-3243-0	CARTRIDGE, OIL FILTER	1	–		

↔ Interchangeable; ≠ not interchangeable; ← new for old; → old for new

0007 DIPSTICK AND GUIDE

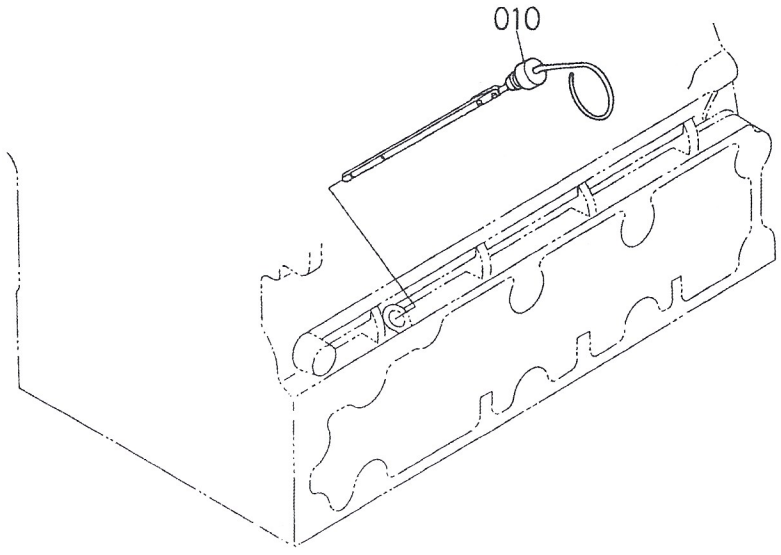

19399-047-10

A:V1902-BG1-PTSI-2

REF. No.	PART No.	PART NAME	Q'TY/S. No. A	Q'TY/S. No. B	I. C.	REMARKS
010	19222-3641-0	GAUGE, OIL	1	-		

↔ Interchangeable; ≠ not interchangeable; ← new for old; → old for new

0100 MAIN BEARING CASE

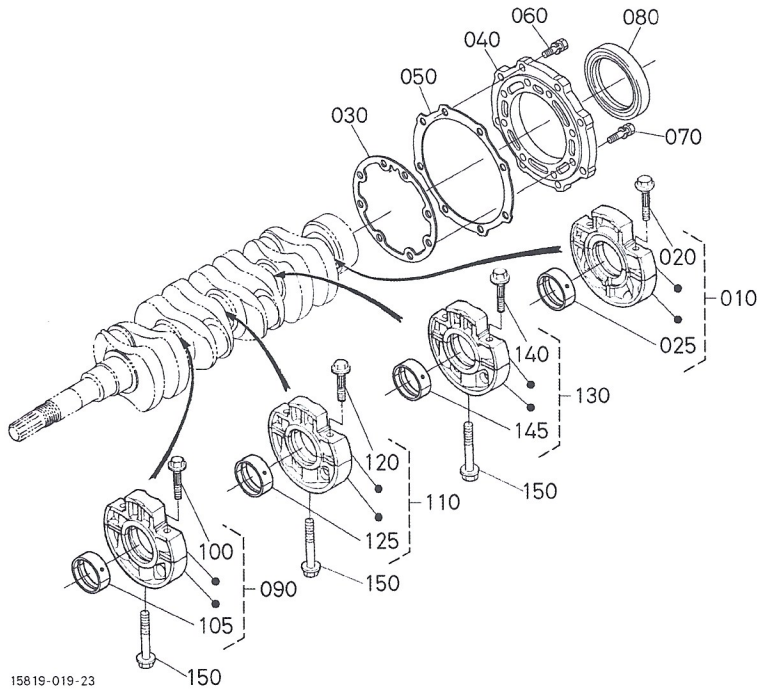

A:V1902-BG1-PTSI-2

REF. No.	PART No.	PART NAME	Q'TY/S. No.		I. C.	REMARKS
			A	B		
010	19202-0709-0	ASSY BRG. CASE, WHEEL	1	–		
020	15601-0454-0	BOLT, BEARING CASE	2	–		
025	17311-2348-0	METAL, CRANKSHAFT	1	–		#SET
030	19207-0436-0	GASKET, BEARING CASE	1	–		
040	19202-0481-0	COVER, BEARING CASE	1	–		
050	15313-0482-0	GASKET, BRG. CASE COV.	1	–		
060	01123-50825	BOLT	8	–		
070	01123-50828	BOLT	8	–		
080	19202-0446-0	SEAL, OIL	1	–		
090	15521-0704-0	ASSY BRG. CASE, MAIN	1	–		
100	15601-0454-0	BOLT, BEARING CASE	2	–		
105	17311-2348-0	METAL, CRANKSHAFT	1	–		#SET
110	15521-0705-0	ASSY BRG. CASE, MAIN	1	–		
120	15601-0454-0	BOLT, BEARING CASE	2	–		
125	17311-2348-0	METAL, CRANKSHAFT	1	–		#SET
130	15411-0706-0	ASSY BRG. CASE, MAIN	1	–		
140	15601-0454-0	BOLT, BEARING CASE	2	–		
145	17311-2348-0	METAL, CRANKSHAFT	1	–		#SET
150	15601-0456-0	BOLT, BEARING CASE	3	–		

↔ Interchangeable; ≠ not interchangeable; ← new for old; → old for new

0101 CAMSHAFT AND IDLE GEAR SHAFT

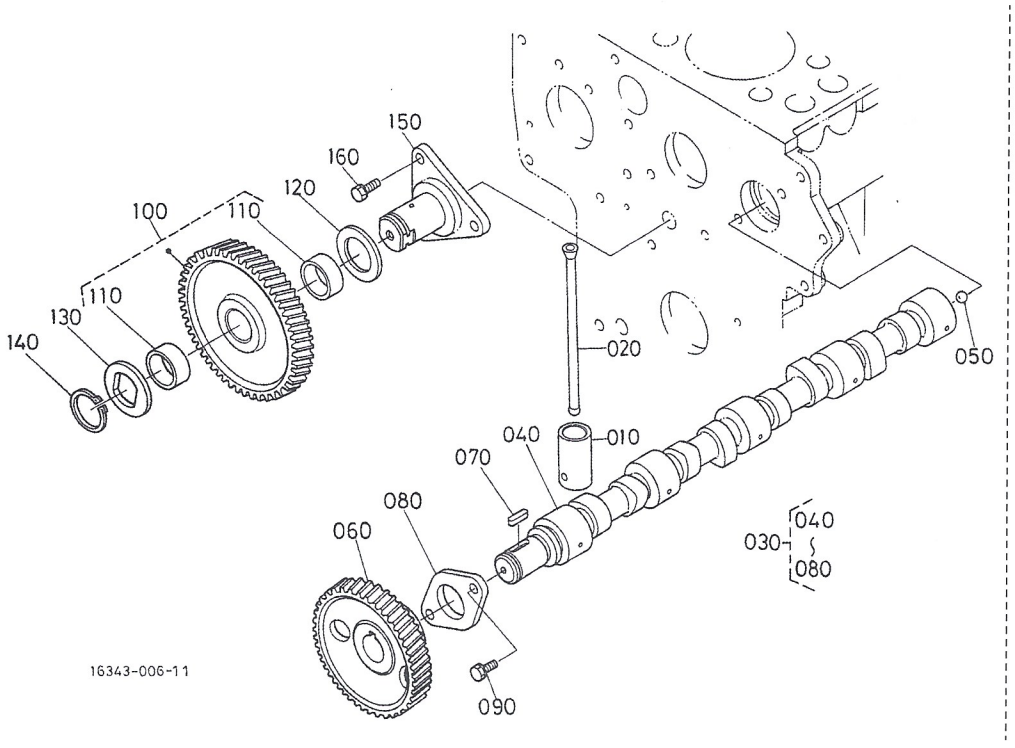

A:V1902-BG1-PTSI-2

REF. No.	PART No.	PART NAME	Q'TY/S. No.		I. C.	REMARKS
			A	B		
010	15601-1555-0	TAPPET	8	-		
020	15221-1511-0	PUSH ROD	8	-		
030	15471-1601-0	ASSY CAMSHAFT	1	-		
040	15471-1615-4	CAMSHAFT	1	-		
050	07715-00401	BALL	1	-		
060	15521-1651-5	GEAR, CAM	1	-		
070	05712-00720	KEY, FEATHER	1	-		
080	15221-1627-0	STOPPER, CAMSHAFT	1	-		
090	01123-50818	BOLT	2	-		
100	15221-2401-0	COMP. GEAR, IDLE	1	-		
110	15221-2498-0	BUSH, IDLE GEAR	2	-		
120	15521-2436-0	COLLAR	1	-		
130	15521-2437-0	COLLAR	1	-		
140	15221-2432-0	CIR CLIP, IDLE GEAR	1	-		
150	19818-2425-0	SHAFT, IDLE GEAR	1	-		
160	01123-50818	BOLT	3	-		

↔ Interchangeable; ≠ not interchangeable; ← new for old; → old for new

0102 PISTON AND CRANKSHAFT

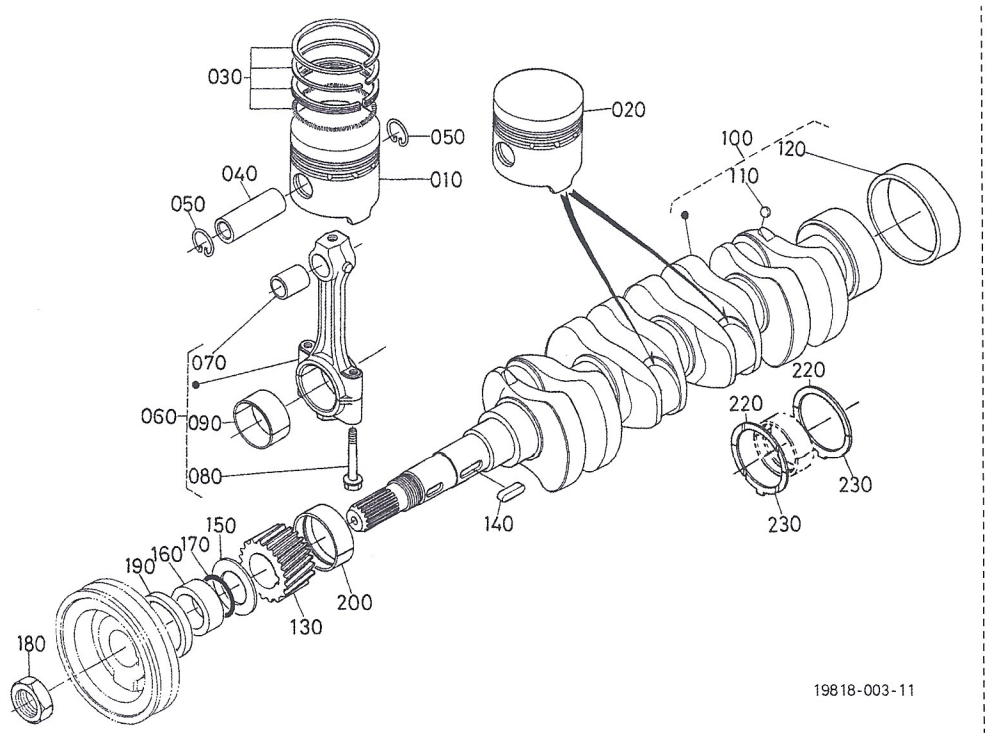

A:V1902-BG1-PTSI-2

REF. No.	PART No.	PART NAME	Q'TY/S. No.		I. C.	REMARKS
			A	B		
010	19274-2111-0	PISTON	2	-		STD
010	19274-2191-0	PISTON	2	-		+0.5mm
020	19439-2111-0	PISTON	2	-		STD
020	19439-2191-0	PISTON	2	-		+0.5mm
030	19274-2105-0	ASSY PISTON RING	4	-		STD
030	19274-2109-2	ASSY PISTON RING	4	-		+0.5mm
040	15521-2131-0	PIN, PISTON	4	-		
050	15221-2133-0	CIR CLIP, PISTON PIN	8	-		
060	15471-2201-2	ASSY CONNECTING ROD	4	-		
070	15221-2198-2	BUSH, PISTON PIN	4	-		
080	15521-2214-2	BOLT, CONNECTING ROD	8	-		
090	15471-2231-0	METAL, CRANKPIN	4	-		STD SET
090	15471-2297-0	METAL, CRANKPIN	4	-		-0.2mm SET
090	15471-2298-0	METAL, CRANKPIN	4	-		-0.4mm SET
100	19202-2301-0	COMP. CRANKSHAFT	1	-		
110	07715-00401	BALL	4	-		
120	19202-2328-0	BUSH, CRANKSHAFT	1	-		
130	15471-2411-0	GEAR, CRANK	1	-		
140	05712-00720	KEY, FEATHER	1	-		
150	15471-2331-2	SLINGER, OIL	1	-		
160	19202-2325-0	COLLAR, CRANKSHAFT	1	-		
170	04811-10300	O RING	1	-		
180	15221-2336-0	NUT, CRANKSHAFT	1	-		
190	19202-0414-0	SEAL, OIL	1	-		
200	17311-2347-2	METAL, CRANKSHAFT	1	-		
210	----	BLANK	-	-		#
220	15521-2353-0	METAL, SIDE	2	-		
230	19202-2354-0	METAL, SIDE	2	-		STD
230	19202-2397-0	METAL, SIDE	2	-		+0.2mm
230	19202-2398-0	METAL, SIDE	2	-		+0.4mm

↔ Interchangeable; ≠ not interchangeable; ← new for old; → old for new

0103 FLYWHEEL

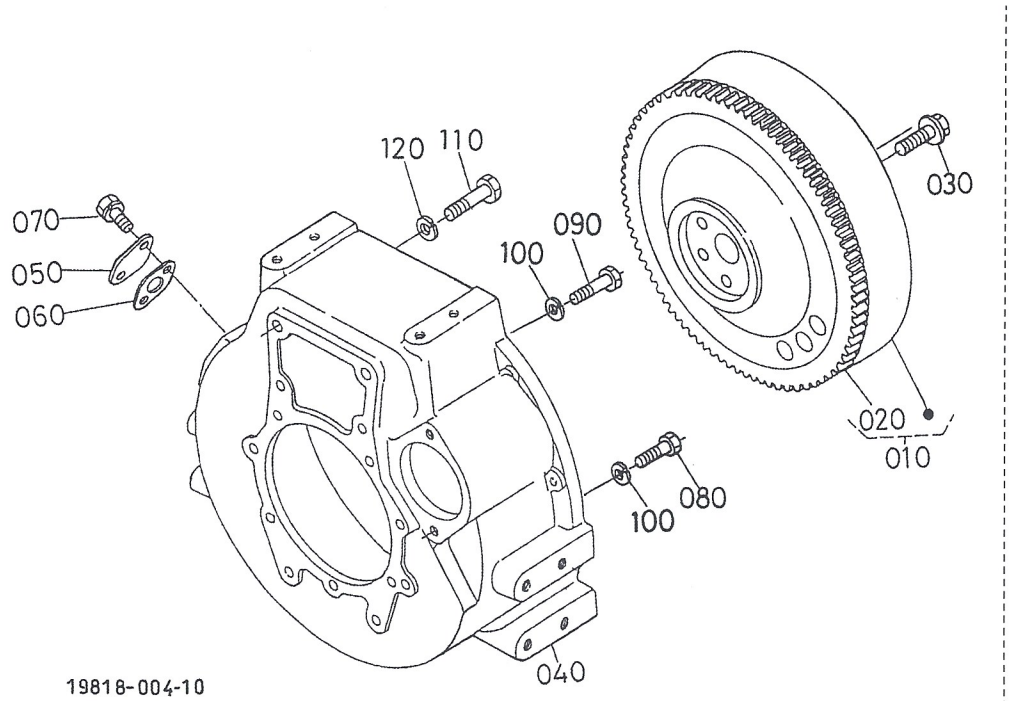

A:V1902-BG1-PTSI-2

REF. No.	PART No.	PART NAME	Q'TY/S. No.		I. C.	REMARKS
			A	B		
010	19818-2501-0	COMP. FLYWHEEL	1	-		
020	15221-6382-0	GEAR, RING	1	-		
030	15321-2516-3	BOLT, FLYWHEEL	6	-		
040	19416-0461-2	HOUSING, FLYWHEEL	1	-		
050	15521-0468-0	COVER	1	-		
060	15521-0479-0	PACKING, COVER	1	-		
070	01123-60816	BOLT	2	-		
080	01073-51032	BOLT	8	-		
090	01073-51042	BOLT	3	-		
100	04512-60100	WASHER, SPRING	11	-		
110	01073-51250	BOLT	2	-		
120	04512-60120	WASHER, SPRING	2	-		

↔ Interchangeable; ≠ not interchangeable; ← new for old; → old for new

0105 FUEL CAMSHAFT AND GOVERNOR SHAFT

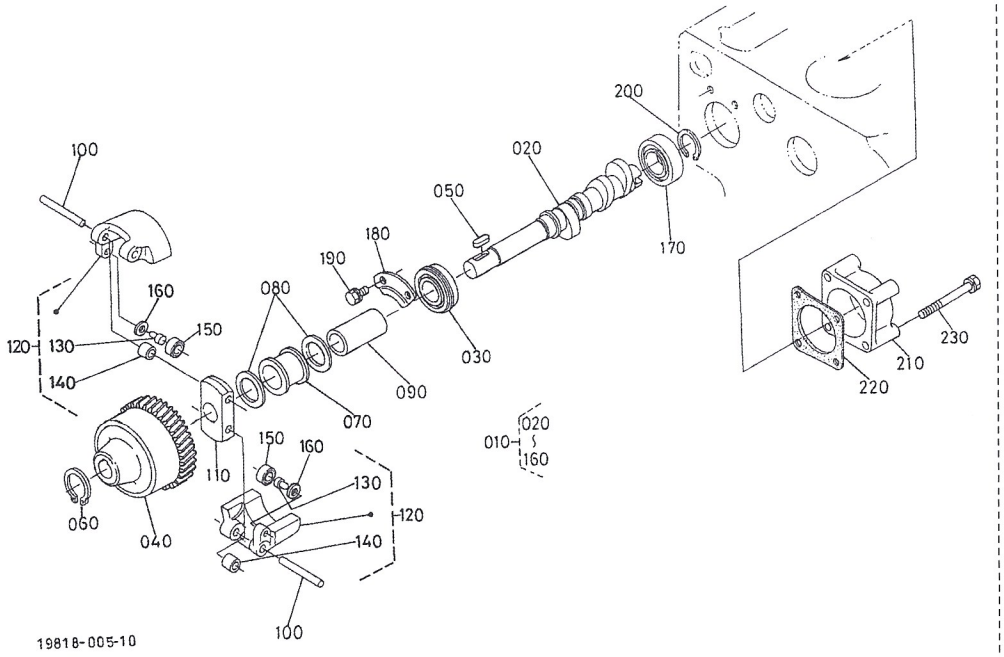

A:V1902-BG1-PTSI-2

REF. No.	PART No.	PART NAME	Q'TY/S. No.		I. C.	REMARKS
			A	B		
010	19818-1602-0	ASSY CAMSHAFT, FUEL	1	-		
020	19818-1617-0	CAMSHAFT, FUEL	1	-		
030	08153-06205	BEARING, BALL	1	-		
040	19818-5115-0	GEAR, INJECTION PUMP	1	-		
050	05712-00525	KEY, FEATHER	1	-		
060	04612-00240	CIR CLIP, EXTERNAL	1	-		
070	19818-5545-0	SLEEVE, GOVERNOR	1	-		
080	19818-5546-0	WASHER, THRUST	2	-		
090	19818-5551-0	COLLAR, GOV. WEIGHT	1	-		
100	19818-5526-0	SHAFT, GOV. WEIGHT	2	-		
110	19818-5527-0	HOLDER, GOV. WEIGHT	1	-		
120	19818-5506-0	COMP. WEIGHT, GOVERNOR	2	-		
130	19818-5528-0	PIN, GOVERNOR WEIGHT	2	-		
140	19818-5538-0	BUSH, GOVERNOR	4	-		
150	19818-5560-0	BEARING	2	-		
160	19818-5534-0	WASHER	2	-		
170	19077-9730-0	BEARING, BALL	1	-		
180	15221-1632-0	STOPPER, FUEL C/SHAFT	1	-		
190	01123-60814	BOLT	2	-		
200	04612-00250	CIR CLIP, EXTERNAL	1	-		
210	19222-1621-3	COVER, FUEL CAMSHAFT	1	-		
220	15476-8311-0	GASKET, C/SHAFT COVER	1	-		
230	01133-51070	BOLT, WITH WASHER	4	-		

↔ Interchangeable; ≠ not interchangeable; ← new for old; → old for new

0200 ENGINE STOP LEVER

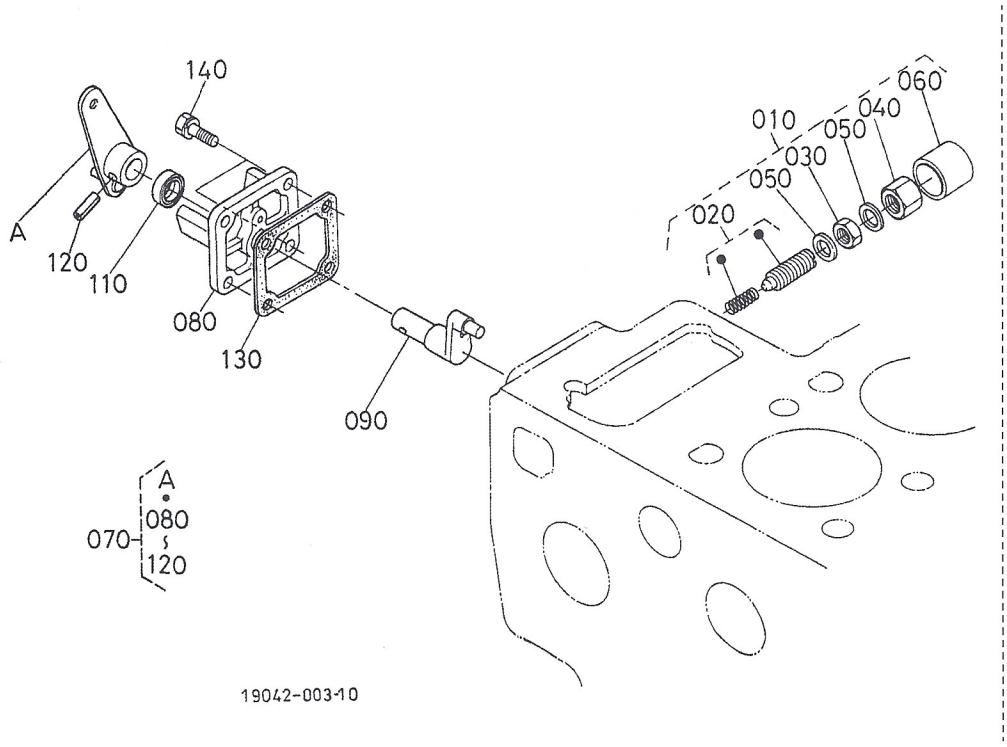

A:V1902-BG1-PTSI-2

REF. No.	PART No.	PART NAME	Q'TY/S. No.		I. C.	REMARKS
			A	B		
010	19818-5409-0	APPARATUS, IDLING	1	-		
020	19818-5410-3	ASSY BOLT, ADJUSTMENT	1	-		
030	15401-9201-0	NUT	1	-		
040	15521-9233-0	NUT	1	-		
050	15021-3366-0	GASKET	2	-		
060	15521-5427-0	CAP	1	-		
070	19818-5770-2	ASSY LEVER, ENG. STOP	1	-		
080	15471-5165-2	COVER, INJECTION PUMP	1	-		
090	17331-5774-0	SHAFT, LEVER	1	-		
100	----	BLANK	-	-		
110	15471-5798-0	SEAL, OIL	1	-		
120	05411-00420	PIN, SPRING	1	-		
130	1A021-5166-0	GASKET, PUMP COVER	1	-		
140	01023-50618	BOLT	4	-		

0202 INJECTION PUMP

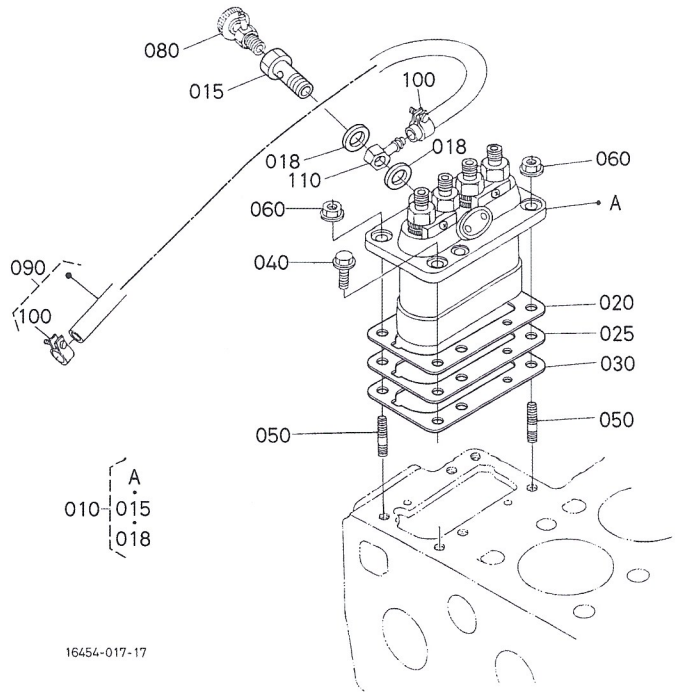

OLD PART

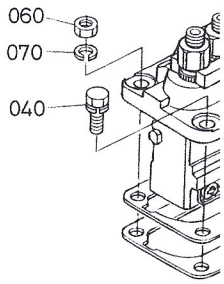

A:V1902-BG1-PTSI-2

REF. No.	PART No.	PART NAME	Q'TY/S. No. A	Q'TY/S. No. B	I. C.	REMARKS
010	19202-5101-0	ASSY PUMP, INJECTION	1	-		
015	15471-5132-0	SCREW, HOLLOW	1	-		
018	15401-9665-0	GASKET	2	-		
020	19077-5209-2	SHIM	1	-		0.20mm
025	15471-5211-0	SHIM	1	-		0.30mm
030	19077-5212-3	SHIM, INJECTION PUMP	2	-		0.30mm
040	01123-50822	BOLT	4 <=4X9999	-		#
040	01754-50820	BOLT, FLANGE	4 >=4Y0001	-	←	#
050	19818-9153-0	STUD	2	-		
060	02156-50080	NUT	2 <=4X9999	-		#
060	02751-50080	NUT, FLANGE	2 >=4Y0001	-	≠	#
070	04512-60080	WASHER, SPRING	2 <=4X9999	-		#
080	14311-6050-4	ASSY COCK, JET START	1	-		
090	14681-4201-0	ASSY PIPE, FUEL	1	-		
100	14301-4275-0	CLIP, PIPE	2	-		
110	15401-9569-0	JOINT, EYE	1	-		

↔ Interchangeable; ≠ not interchangeable; ← new for old; → old for new

0204 GOVERNOR

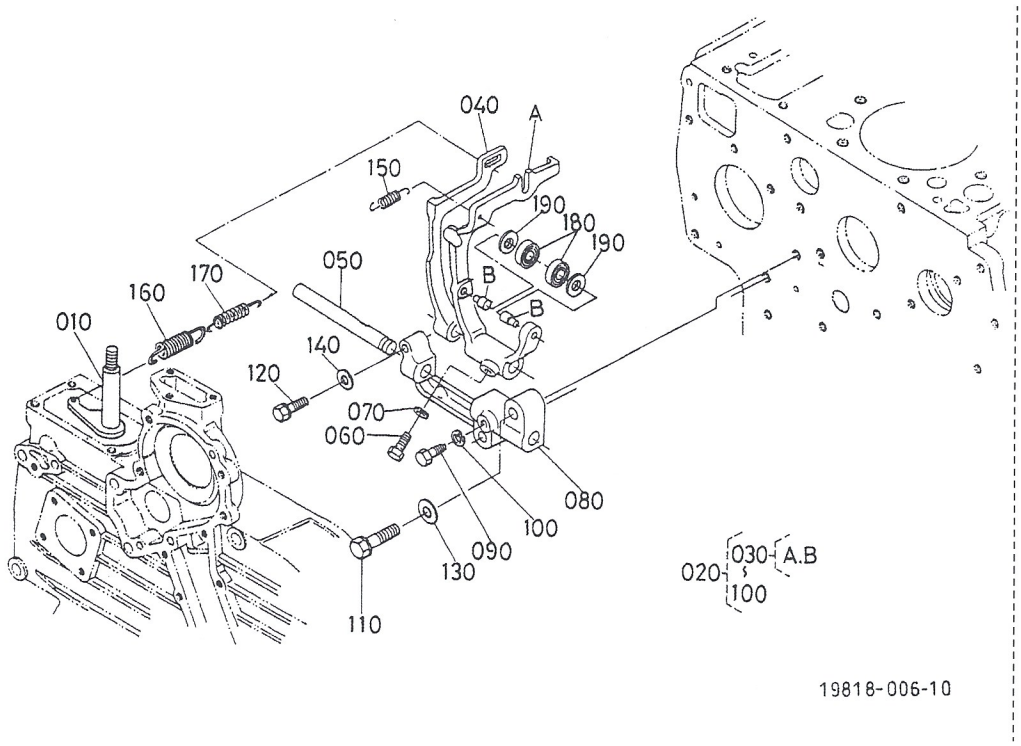

A:V1902-BG1-PTSI-2

REF. No.	PART No.	PART NAME	Q'TY/S. No.		I. C.	REMARKS
			A	B		
010	15601-5602-0	COMP. LEVER, GOVERNOR	1	–		
020	19818-5605-0	ASSY LEVER, FORK	1	–		
030	19818-5604-0	COMP. LEVER, FORK	1	–		
040	19818-5613-0	LEVER, FORK	1	–		
050	19818-5615-0	SHAFT, FORK LEVER	1	–		
060	01053-50518	BOLT	1	–		
070	04512-60050	WASHER, SPRING	1	–		
080	19818-5623-0	HOLDER, FORK LEVER	1	–		
090	15221-6641-0	BOLT	1	–		
100	04512-60060	WASHER, SPRING	1	–		
110	01123-50832	BOLT	2	–		
120	01023-50628	BOLT	1	–		
130	04012-50080	WASHER, PLAIN	2	–		
140	04012-50060	WASHER, PLAIN	1	–		
150	19818-5648-0	SPRING, START	1	–		
160	19808-5641-0	SPRING, GOVERNOR	1	–		
170	19808-5642-0	SPRING, GOVERNOR	1	–		
180	19818-5560-0	BEARING	2	–		
190	19818-5534-0	WASHER	2	–		

↔ Interchangeable; ≠ not interchangeable; ← new for old; → old for new

0205 SPEED CONTROL PLATE

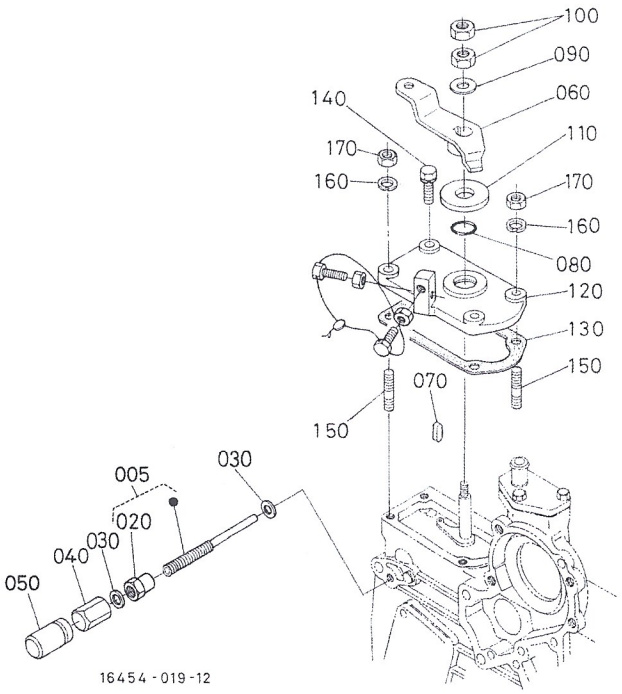

A:V1902-BG1-PTSI-2

REF. No.	PART No.	PART NAME	Q'TY/S. No.		I. C.	REMARKS
			A	B		
005	1G628-5435-0	ASSY BOLT, ADJUSTMENT	1	-		
010	----	BLANK	-	-		
020	15601-9201-2	NUT	1	-		
030	15601-9665-0	GASKET	2	-		
040	15841-1462-0	NUT	1	-		
050	16221-5442-0	CAP	1	-		
060	15504-5715-0	LEVER, SPEED CONTROL	1	-		
070	05712-00408	KEY, FEATHER	1	-		
080	04816-00120	O RING	1	-		
090	04013-60080	WASHER, PLAIN	1	-		
100	02112-50080	NUT	2	-		
110	15521-5724-0	COLLAR	1	-		
120	15521-5711-5	PLATE, SPEED CONTROL	1	-		
130	15439-5721-2	GASKET	1 <=5R9999	-		#
130	1E147-5721-0	GASKET, PLATE	1 >=5S0001	-	←	#
140	01023-50620	BOLT	2	-		
150	15221-8821-0	STUD	2	-		
160	04512-60060	WASHER, SPRING	2	-		
170	02056-50060	NUT	2	-		

↔ Interchangeable; ≠ not interchangeable; ← new for old; → old for new

0206 NOZZLE HOLDER AND GLOW PLUG

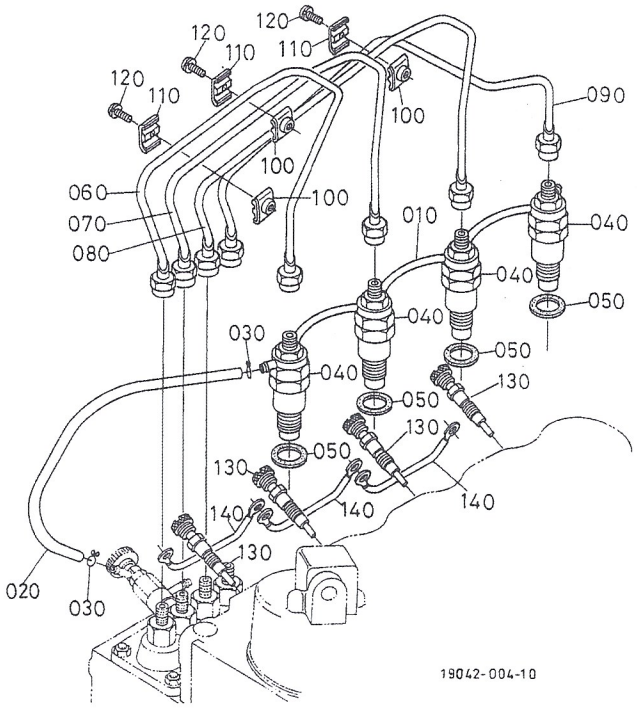

A:V1902-BG1-PTSI-2

REF. No.	PART No.	PART NAME	Q'TY/S. No.		I. C.	REMARKS
			A	B		
010	19202-4250-0	ASSY PIPE, OVER FLOW	1	–		
020	17331-4250-0	PIPE, FUEL OVER FLOW	1	–		
030	10244-4232-0	CLIP, PIPE	2	–		
040	19202-5302-0	ASSY HOLDER, NOZZLE	4	–		
050	17011-5362-0	GASKET	4	–		
060	15469-5371-0	PIPE, INJECTION	1	–		
070	15469-5372-0	PIPE, INJECTION	1	–		
080	15469-5373-0	PIPE, INJECTION	1	–		
090	15469-5374-0	PIPE, INJECTION	1	–		
100	15841-5385-0	CLAMP, PIPE	3	–		
110	15841-5386-0	CLAMP, PIPE	3	–		
120	03024-50520	SCREW, WITH WASHER	3	–		
130	15521-6551-0	GLOW PLUG	4	–		
140	15401-6556-0	CORD, GLOW PLUG	3	–		

↔ Interchangeable; ≠ not interchangeable; ← new for old; → old for new

0207 NOZZLE HOLDER (COMPONENT PARTS)

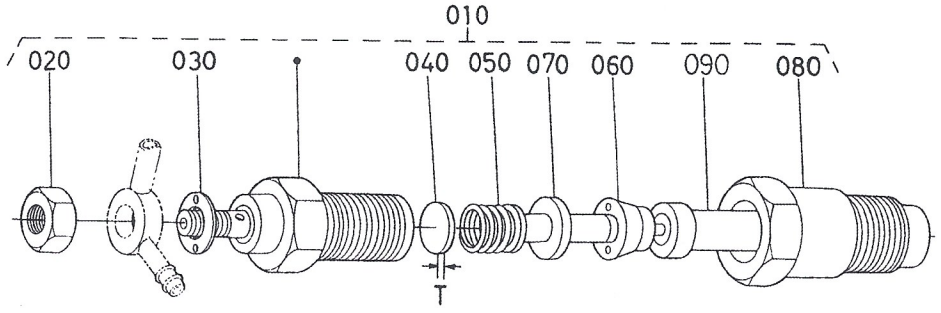

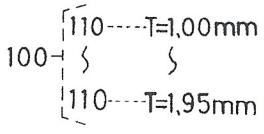

19449-010-10

A:V1902-BG1-PTSI-2

REF. No.	PART No.	PART NAME	Q'TY/S. No.		I. C.	REMARKS
			A	B		
010	19202-5302-0	ASSY HOLDER, NOZZLE	4	-		
020	15221-9202-0	NUT	4	-		
030	15221-9402-0	WASHER, PLAIN	4	-		
040	15221-5323-0	WASHER, ADJUSTING	4	-		
050	15221-5317-0	SPRING, NOZZLE	4	-		
060	15221-5335-0	PIECE, DISTANCE	4	-		
070	15221-5316-0	PUSH ROD	4	-		
080	15221-5328-0	NUT, NOZZLE	4	-		
090	19202-5361-0	PIECE, NOZZLE	4	-		
100	15221-9810-0	ASSY WASHER, ADJUST	4	-		OPTION
110	15221-9811-0	WASHER, ADJUSTING	4	-		1.00mm
110	15221-9812-0	WASHER, ADJUSTING	4	-		1.05mm
110	15221-9813-0	WASHER, ADJUSTING	4	-		1.10mm
110	15221-9814-0	WASHER, ADJUSTING	4	-		1.15mm
110	15221-9815-0	WASHER, ADJUSTING	4	-		1.20mm
110	15221-9816-0	WASHER, ADJUSTING	4	-		1.25mm
110	15221-9817-0	WASHER, ADJUSTING	4	-		1.30mm
110	15221-9818-0	WASHER, ADJUSTING	4	-		1.35mm
110	15221-9819-0	WASHER, ADJUSTING	4	-		1.40mm
110	15221-9820-0	WASHER, ADJUSTING	4	-		1.45mm
110	15221-9821-0	WASHER, ADJUSTING	4	-		1.50mm
110	15221-9822-0	WASHER, ADJUSTING	4	-		1.55mm
110	15221-9823-0	WASHER, ADJUSTING	4	-		1.60mm
110	15221-9824-0	WASHER, ADJUSTING	4	-		1.65mm
110	15221-9825-0	WASHER, ADJUSTING	4	-		1.70mm
110	15221-9826-0	WASHER, ADJUSTING	4	-		1.75mm
110	15221-9827-0	WASHER, ADJUSTING	4	-		1.80mm
110	15221-9828-0	WASHER, ADJUSTING	4	-		1.85mm
110	15221-9829-0	WASHER, ADJUSTING	4	-		1.90mm
110	15221-9830-0	WASHER, ADJUSTING	4	-		1.95mm

0300 FUEL FILTER

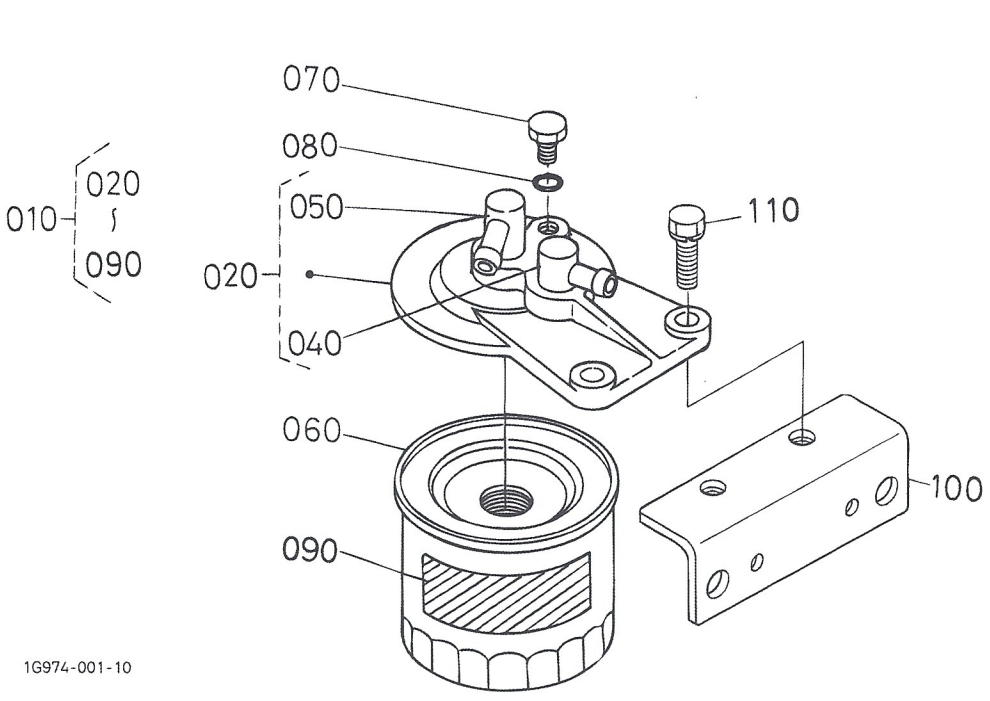

A:V1902-BG1-PTSI-2

REF. No.	PART No.	PART NAME	Q'TY/S. No.		I. C.	REMARKS
			A	B		
010	15291-4301-0	ASSY FILTER, FUEL	1	-		
020	15291-4320-0	ASSY COVER, FILTER	1	-		
030	----	BLANK	-	-		
040	15108-4361-0	JOINT, PIPE	1	-		
050	15108-4378-0	JOINT, PIPE	1	-		
060	15221-4317-0	ELEMENT, FILTER	1	-		
070	19222-4328-0	PLUG, FILTER BREATHER	1	-		
080	15108-4329-0	O RING	1	-		
090	15291-8776-0	MARK, FORM	1	-		
100	19416-4343-3	HOLDER, FUEL FILTER	1	-		
110	01123-50825	BOLT	2	-		

0301 FUEL PUMP (MECHANICAL)

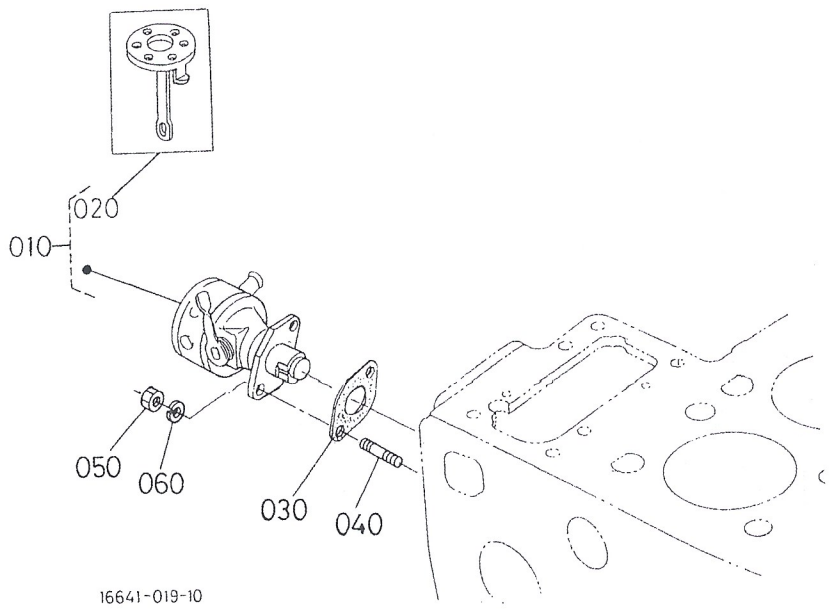

A:V1902-BG1-PTSI-2

REF. No.	PART No.	PART NAME	Q'TY/S. No.		I. C.	REMARKS
			A	B		
010	19844-5203-0	ASSY PUMP, FUEL	1	–		
020	19844-5204-0	COMP. DIAPHRAGM	1	–		
030	1G751-5214-0	GASKET, FUEL PUMP	1	–		
040	01513-50616	STUD	2	–		
050	02056-50060	NUT	2	–		
060	04512-60060	WASHER, SPRING	2	–		

↔ Interchangeable; ≠ not interchangeable; ← new for old; → old for new

0402 ALTERNATOR AND PULLEY

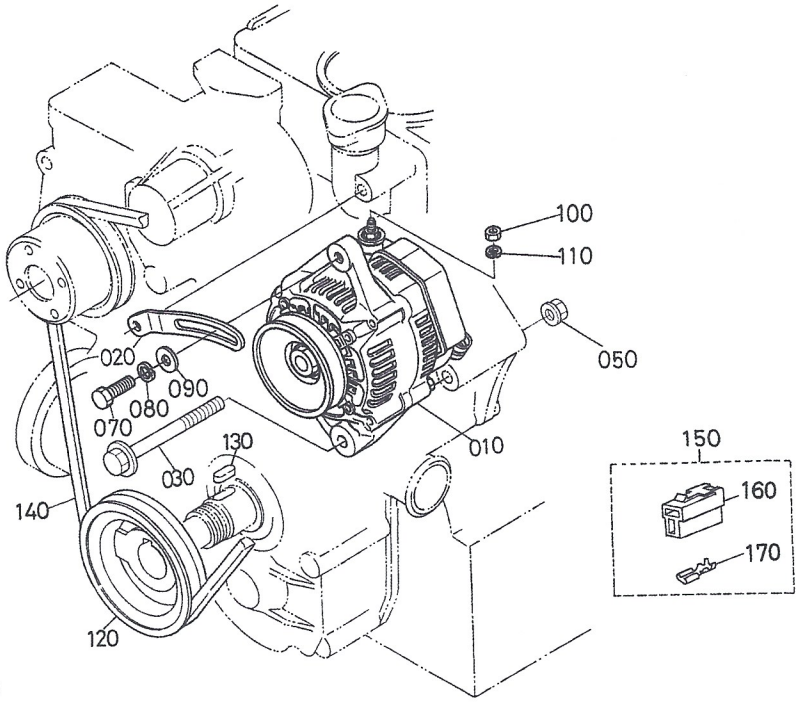

19042-005-12

OLD PART

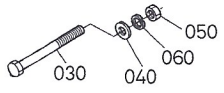

19042-801-10

A:V1902-BG1-PTSI-2

REF.No.	PART No.	PART NAME	Q'TY/S.No. A	Q'TY/S.No. B	I.C.	REMARKS
010	17356-6401-0	ASSY ALTERNATOR	1	-		12V 45A
020	17077-6442-0	STAY,DYNAMO	1	-		
030	01173-51000	BOLT	1 <=4Z9999	-		#
030	01774-51000	BOLT,FLANGE	1 >=5A0001	-	≠	#
040	04011-50100	WASHER,PLAIN	1 <=4Z9999	-		#
050	02176-50100	NUT	1 <=4Z9999	-		#
050	02771-60100	NUT,FLANGE	1 >=5A0001	-	←	#
060	04512-60100	WASHER,SPRING	1 <=4Z9999	-		#
070	01153-60830	BOLT	1	-		
080	04512-60080	WASHER,SPRING	1	-		
090	04015-60080	WASHER,PLAIN	1	-		
100	02056-50060	NUT	1	-		
110	04512-60060	WASHER,SPRING	1	-		
120	15192-7428-2	PULLEY,FAN DRIVE	1	-		
130	05712-00720	KEY,FEATHER	1	-		
140	15469-9701-0	V BELT,A	1	-		
150	19838-6583-0	ASSY COUPLER	1	-		
160	19872-6588-0	CONNECTOR	1	-		
170	19237-6591-0	TERMINAL	2	-		

↔ Interchangeable; ≠ not interchangeable; ← new for old; → old for new

0403 ALTERNATOR (COMPONENT PARTS)

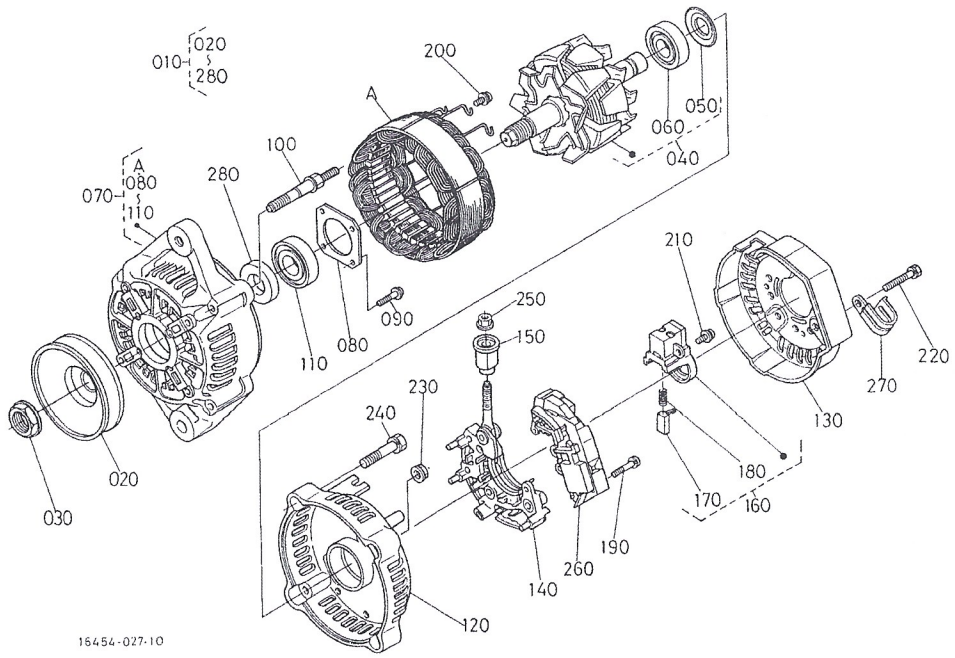

A:V1902-BG1-PTSI-2

REF. No.	PART No.	PART NAME	Q'TY/S. No.		I. C.	REMARKS
			A	B		
010	17356-6401-0	ASSY ALTERNATOR	1	-		
020	16427-6411-0	PULLEY, ALTERNATOR	1	-		
030	15881-9201-0	NUT	1	-		
040	17369-6404-0	ROTOR	1	-		
050	15881-6480-0	COVER, BEARING	1	-		
060	17369-6477-0	BEARING, BALL	1	-		
070	17369-6402-0	FRAME, DRIVE END	1	-		
080	15881-6471-0	PLATE, RETAINER	1	-		
090	15881-9301-0	SCREW, ROUND HEAD	4	-		
100	15881-6426-0	BOLT, THROUGH	2	-		
110	15881-6478-0	BEARING, BALL	1	-		
120	17369-6406-0	FRAME, END	1	-		
130	17369-6423-0	COVER, END	1	-		
140	17369-6485-0	ASSY RECTIFIER	1	-		
150	15881-6490-0	BUSH, INSULATION	1	-		
160	15881-6431-0	HOLDER, BRUSH	1	-		
170	15881-6409-0	BRUSH	2	-		
180	15881-6433-0	SPRING, BRUSH	2	-		
190	15881-9302-0	SCREW, ROUND HEAD	2	-		
200	15881-9303-0	SCREW, ROUND HEAD	6	-		
210	15881-9304-0	SCREW, ROUND HEAD	1	-		
220	15881-9104-0	BOLT	3	-		
230	15881-9202-0	NUT	2	-		
240	15881-9105-0	BOLT	2	-		
250	14182-9203-0	NUT	1	-		
260	1K531-6460-0	ASSY REGULATOR	1	-		
270	17369-6757-0	CLAMP, CORD	1	-		
280	15881-6415-0	COLLAR	1	-		

↔ Interchangeable; ≠ not interchangeable; ← new for old; → old for new

0404 STARTER

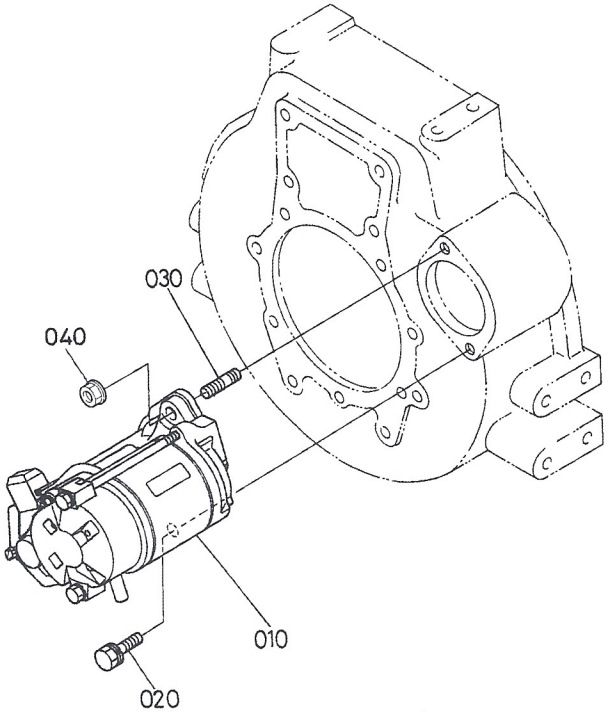

19818-010-11

OLD PART

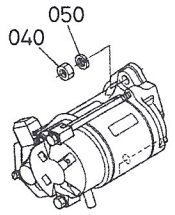

16689-825-10

A:V1902-BG1-PTSI-2

REF. No.	PART No.	PART NAME	Q'TY/S. No. A	Q'TY/S. No. B	I. C.	REMARKS
010	15461-6301-0	ASSY STARTER	1	-		12V 1.4Kw
020	01133-51030	BOLT	1	-		
030	01517-51028	STUD	1	-		
040	02176-50100	NUT	1 <=5R9999	-		#
040	02771-60100	NUT, FLANGE	1 >=5S0001	-	≠	#
050	04512-60100	WASHER, SPRING	1 <=5R9999	-		#

↔ Interchangeable; ≠ not interchangeable; ← new for old; → old for new

0405 STARTER (COMPONENT PARTS)

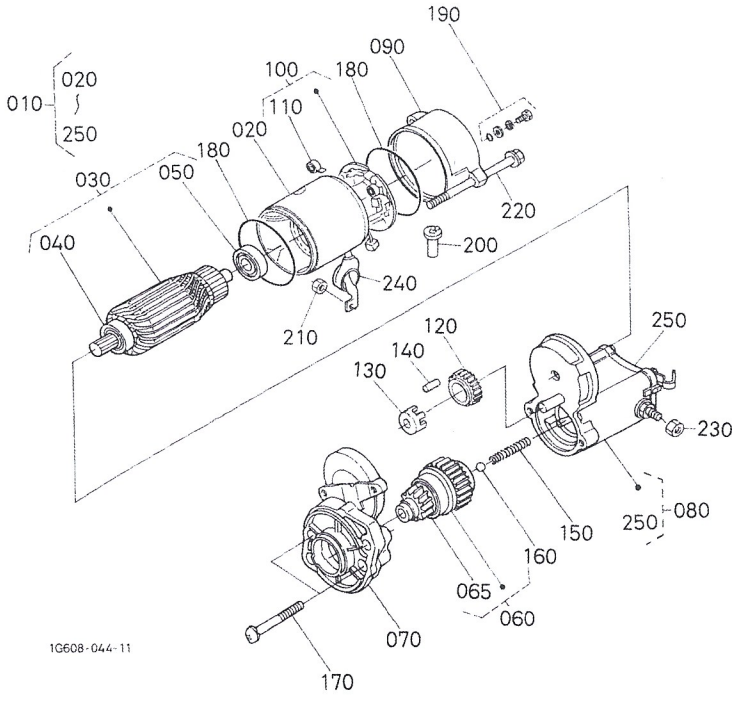

A:V1902-BG1-PTSI-2

REF.No.	PART No.	PART NAME	Q'TY/S.No.		I.C.	REMARKS
			A	B		
010	15461-6301-0	ASSY STARTER	1	-		
020	11197-6308-0	ASSY YOKE	1	-		
030	11197-6307-0	ASSY ARMATURE	1	-		
040	11460-6350-0	BEARING	1	-		
050	11460-6353-0	BEARING	1	-		
060	17341-6304-0	CLUTCH, OVER RUNNING	1	-		
065	17381-6328-0	PINION, BEVEL	1	-		
070	17341-6303-0	FRAME, DRIVE END	1	-		
080	11173-6302-0	ASSY SWITCH, MAGNETIC	1	-		
090	17341-6320-0	FRAME, END	1	-		
100	11197-6338-0	ASSY HOLDER, BRUSH	1	-		
110	15401-6339-0	SPRING, BRUSH	4	-		
120	11460-6327-0	GEAR	1	-		
130	11460-6311-0	RETAINER	1	-		
140	19212-6310-0	ROLLER	5	-		
150	19212-9713-0	BALL	1	-		
160	11460-6312-0	SPRING	1	-		
170	11460-9331-0	BOLT	2	-		
180	15511-9666-0	O RING	2	-		
190	15511-6376-0	ASSY BOLT	2	-		
200	16285-6357-0	PIPE, DRAIN	1	-		
210	13963-9201-0	NUT, HEXAGON	1	-		
220	11197-6332-0	BOLT	2	-		
230	16285-9201-0	NUT, HEXAGON	1	-		
240	11173-6313-0	COVER, TERMINAL	1	-		
250	16285-9805-0	ASSY COVER	1	-		

0406 OIL SWITCH AND PLUG

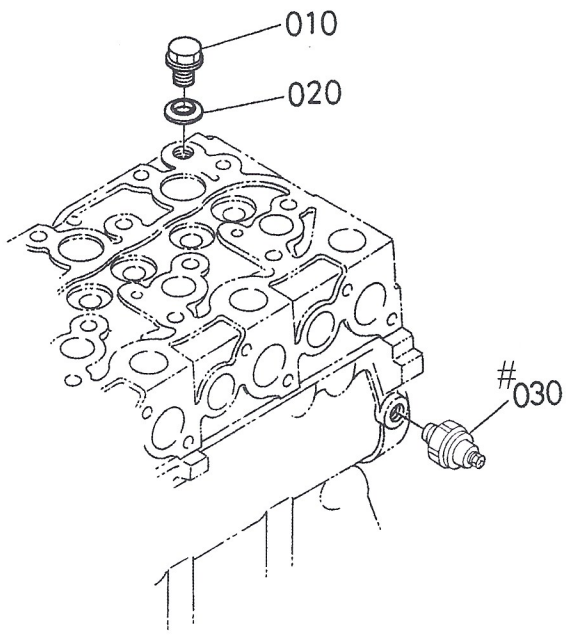

17494-002-11

A:V1902-BG1-PTSI-2

REF. No.	PART No.	PART NAME	Q'TY/S. No.		I. C.	REMARKS
			A	B		
010	15000-3608-0	PLUG, CYLINDER HEAD	1	-		
020	04717-01600	WASHER, WITH RUBBER	1	-		
030	15841-3901-0	SWITCH, OIL	1	-		

0500 WATER FLANGE AND THERMOSTAT

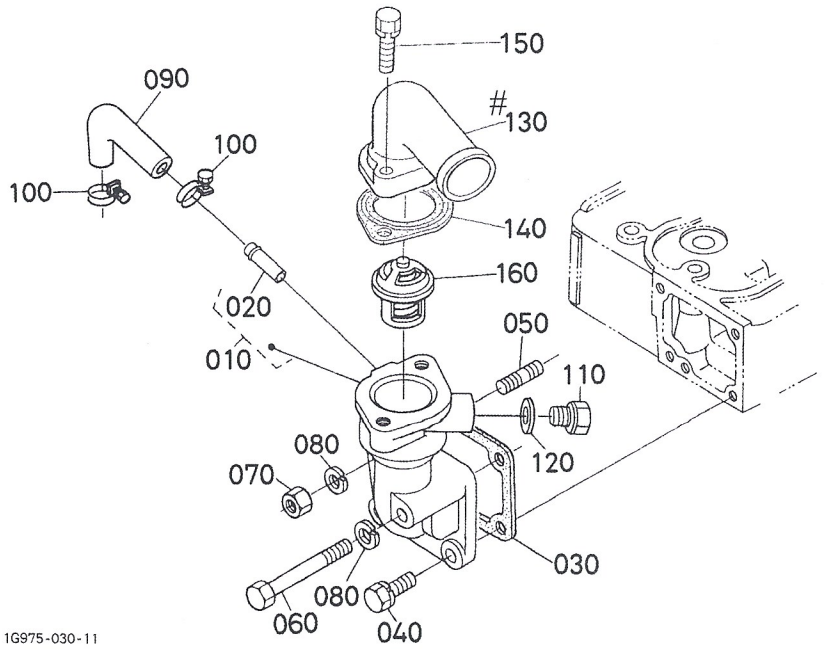

A:V1902-BG1-PTSI-2

REF. No.	PART No.	PART NAME	Q'TY/S. No.		I. C.	REMARKS
			A	B		
010	19202-7270-2	COMP. FLANGE, WATER	1	–		
020	17331-7334-2	PIPE, WATER RETURN	1	–		
030	1A021-7292-0	GASKET, WATER FLANGE	1	–		
040	01123-50820	BOLT	2	–		
050	15221-9153-0	STUD	1	–		
060	01153-50870	BOLT	1	–		
070	02156-50080	NUT	1	–		
080	04512-60080	WASHER, SPRING	2	–		
090	15521-7334-0	PIPE, WATER RETURN	1	–		
100	15109-7336-0	BAND, PIPE	2	–		
110	15512-9601-0	PLUG	1	–		
120	04717-02150	WASHER, WITH RUBBER	1	–		
130	16691-7326-0	COVER, THERMOSTAT	1	–		
140	16221-7327-0	GASKET, THERMOSTAT	1	–		
150	01123-50835	BOLT	2	–		
160	19434-7301-4	ASSY THERMOSTAT	1	–		

↔ Interchangeable; ≠ not interchangeable; ← new for old; → old for new

0501 WATER PUMP

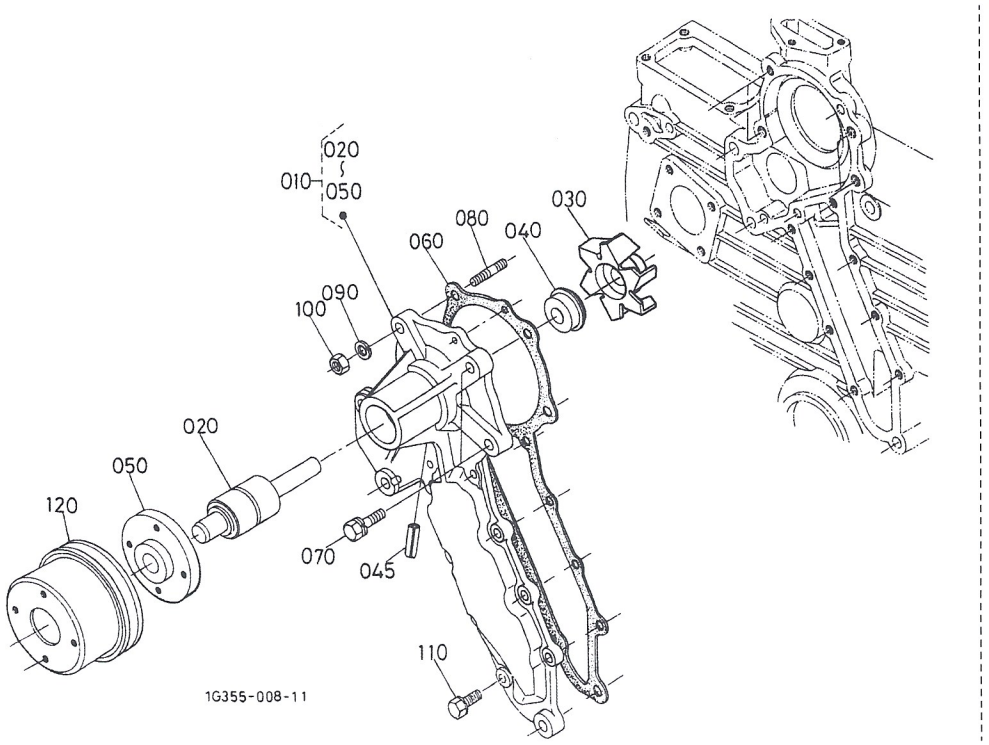

A:V1902-BG1-PTSI-2

REF.No.	PART No.	PART NAME	Q'TY/S.No.		I.C.	REMARKS
			A	B		
010	15521-7303-5	ASSY PUMP,WATER	1	-		
020	15521-7355-0	BEARING	1	-		
030	1A021-7351-0	IMPELLER,WATER PUMP	1	-		
040	16661-7305-0	ASSY SEAL,MECHANICAL	1	-		
045	1E017-3365-0	PIN,SPRING	1	-		
050	1A021-7352-0	FLANGE,W/PUMP SHAFT	1	-		
060	15766-7343-0	GASKET,WATER PUMP	1	-		
070	01123-50828	BOLT	2	-		
080	01518-50822	STUD	2	-		
090	04512-60080	WASHER,SPRING	2	-		
100	02156-50080	NUT	2	-		
110	01023-50618	BOLT	8	-		
120	15471-7425-0	PULLEY,FAN	1	-		

0504 FAN BOLT

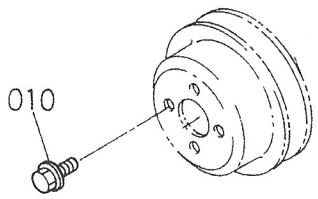

19599-052-10

A:V1902-BG1-PTSI-2

REF. No.	PART No.	PART NAME	Q'TY/S. No.		I. C.	REMARKS
			A	B		
010	01754-50616	BOLT, FLANGE	4	–		

↔ Interchangeable; ≠ not interchangeable; ← new for old; → old for new

0505 RESERVE TANK

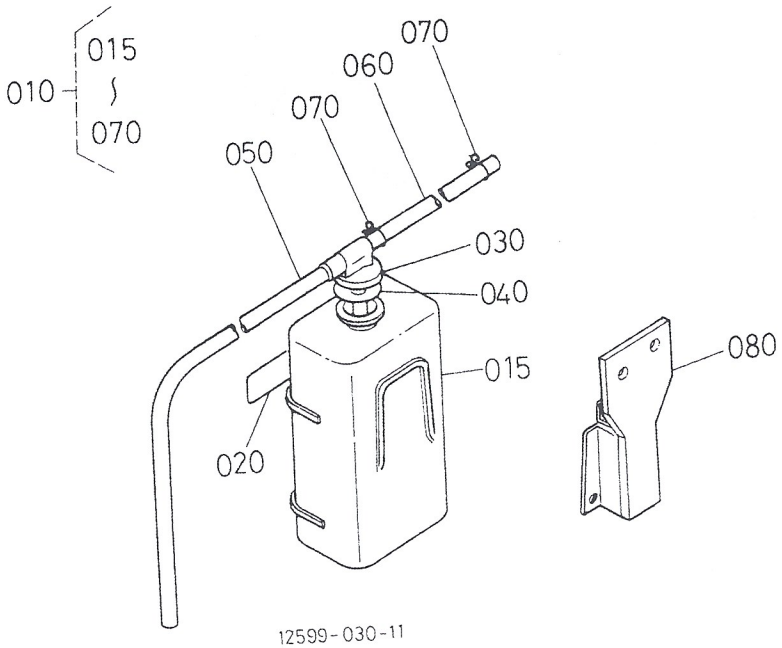

12599-030-11

A:V1902-BG1-PTSI-2

REF. No.	PART No.	PART NAME	Q'TY/S. No.		I. C.	REMARKS
			A	B		
010	15531-7240-2	ASSY TANK, RESERVE	1	-		
015	15531-7241-0	BODY, TANK	1	-		
020	15501-8821-0	LABEL, CAUTION	1	-		
030	15531-7242-2	CAP	1	-		
040	15531-7243-2	GASKET	1	-		
050	15471-7244-0	PIPE, WATER OVER FLOW	1	-		
060	15531-7244-2	PIPE, WATER OVER FLOW	1	-		
070	15501-7247-0	CLIP, PIPE	2	-		
080	19449-7250-2	COMP SUPPORT, TANK	1	-		

↔ Interchangeable: ≠ not interchangeable: ← new for old: → old for new

0600 VALVE AND ROCKER ARM

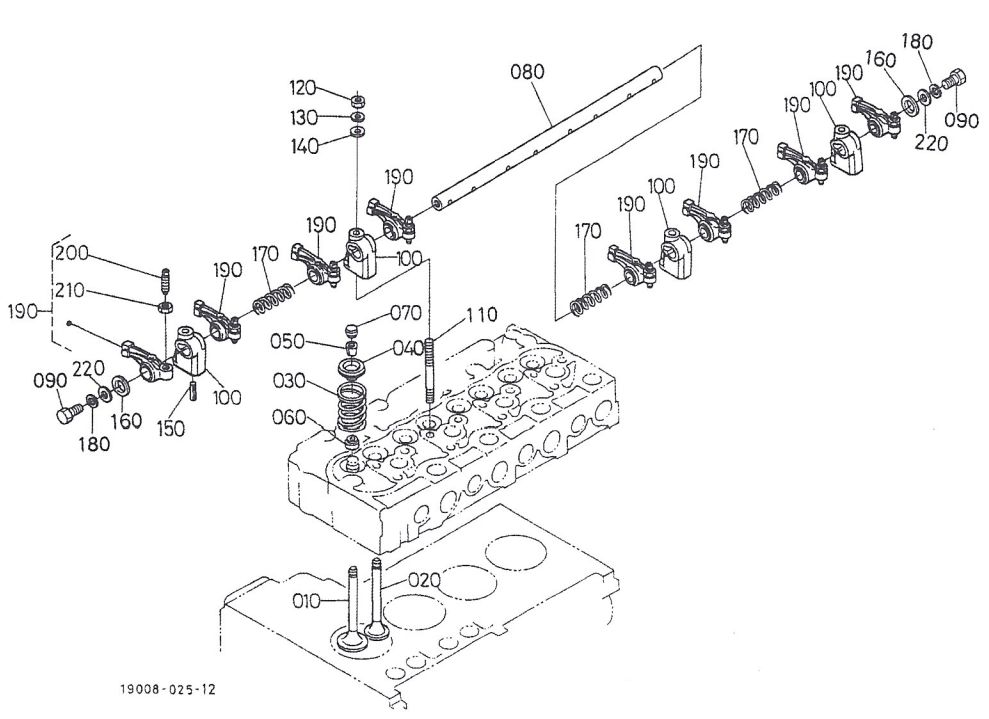

A:V1902-BG1-PTSI-2

REF. No.	PART No.	PART NAME	Q'TY/S. No. A	Q'TY/S. No. B	I. C.	REMARKS
010	15221-1311-0	VALVE, INLET	4	–		
020	15221-1312-0	VALVE, EXHAUST	4	–		
030	15221-1324-0	SPRING, VALVE	8	–		
040	15221-1333-0	RETAINER, VALVE SP.	8	–		
050	15221-1398-0	COLLET, VALVE SPRING	8	–		SET
060	15221-1315-3	SEAL, VALVE STEM	8	–		
070	15221-1328-0	CAP, VALVE	8	–		
080	1A091-1426-0	SHAFT, ROCKER ARM	1	–		
090	01153-50812	BOLT	2	–		
100	15221-1435-0	BRACKET, ROCKER ARM	4 <=5B9999	–		#
100	15221-1435-3	BRACKET, ROCKER ARM	4 >=5C0001	–	←	#
110	15521-9150-0	STUD	4	–		
120	02156-50080	NUT	4	–		
130	04512-60080	WASHER, SPRING	4	–		
140	04012-50080	WASHER, PLAIN	4	–		
150	05411-00528	PIN, SPRING	1	–		
160	15221-1443-0	WASHER, R-ARM. SHAFT	2	–		
170	15221-1431-0	SPRING, ROCKER ARM	3	–		
180	04512-60080	WASHER, SPRING	2	–		
190	15621-1403-0	ASSY ROCKER ARM	8	–		
200	15521-1423-0	SCREW, ADJUSTING	1	–		
210	15021-1424-0	NUT	1	–		
220	04013-60080	WASHER, PLAIN	2	–		

↔ Interchangeable; ≠ not interchangeable; ← new for old; → old for new

0601 INLET MANIFOLD

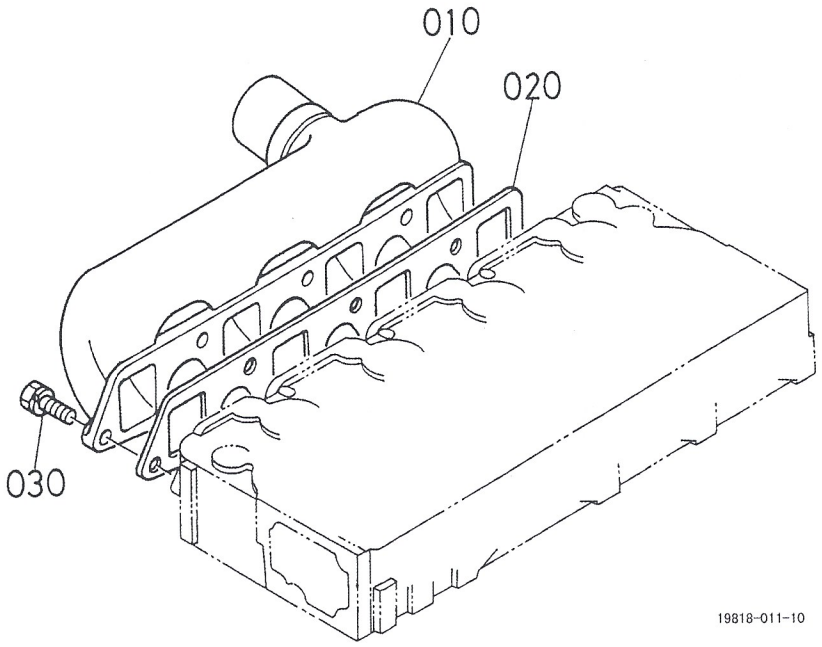

A:V1902-BG1-PTSI-2

REF. No.	PART No.	PART NAME	Q'TY/S. No. A	Q'TY/S. No. B	I. C.	REMARKS
010	19223-1176-0	MANIFOLD, INLET	1	-		
020	15766-1182-0	GASKET, IN-MANIFOLD	1	-		
030	01123-50822	BOLT	7	-		

↔ Interchangeable; ≠ not interchangeable; ← new for old; → old for new

0602 EXHAUST MANIFOLD

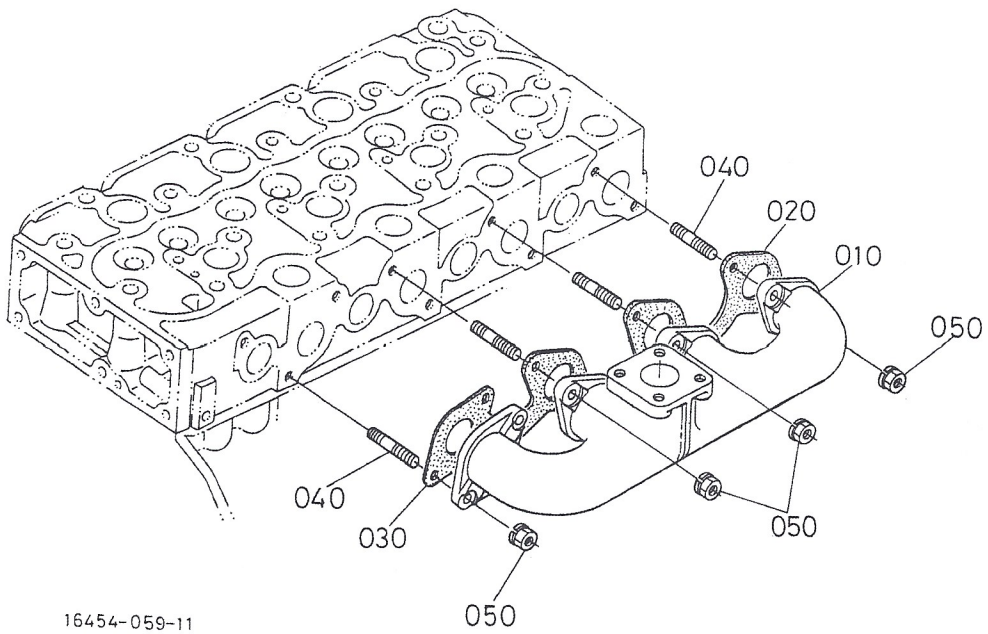

16454-059-11

A:V1902-BG1-PTSI-2

REF. No.	PART No.	PART NAME	Q'TY/S. No. A	Q'TY/S. No. B	I. C.	REMARKS
010	15465-1231-2	MANIFOLD, EXHAUST	1	–		
020	1A091-1236-0	GASKET, EX-MANIFOLD	1	–		
030	1A091-1235-0	GASKET, EX-MANIFOLD	1	–		
040	15221-9153-0	STUD	8	–		
050	16429-9201-0	NUT	8	–		

↔ Interchangeable; ≠ not interchangeable; ← new for old; → old for new

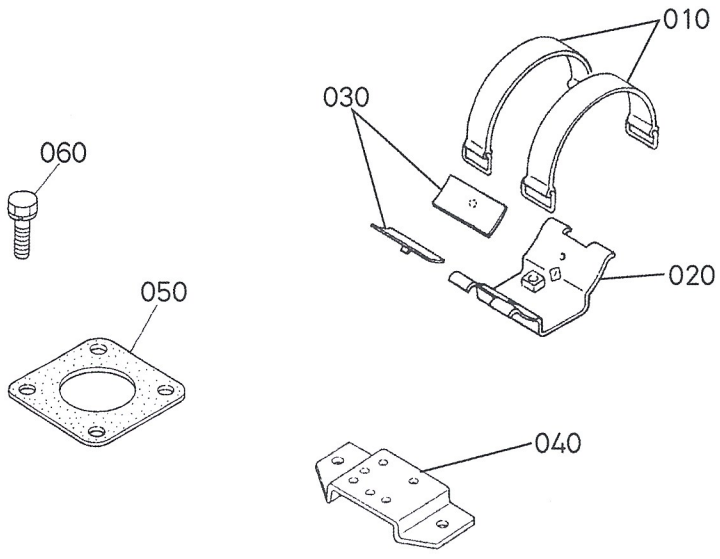

19042-001-10

A:V1902-BG1-PTSI-2

REF. No.	PART No.	PART NAME	Q'TY/S. No.		I. C.	REMARKS
			A	B		
010	38430-1398-0	BAND, AIR CLEANER	2	–		
020	38430-1394-0	SUPPORT, AIR CLEANER	1	–		
030	38430-1397-0	CUSHION	2	–		
040	19416-1157-3	STAY, AIR CLEANER	1	–		
050	15263-1237-0	GASKET, MUFFLER NA	1	–		
060	01133-51028	BOLT	2	–		

0809 LABEL

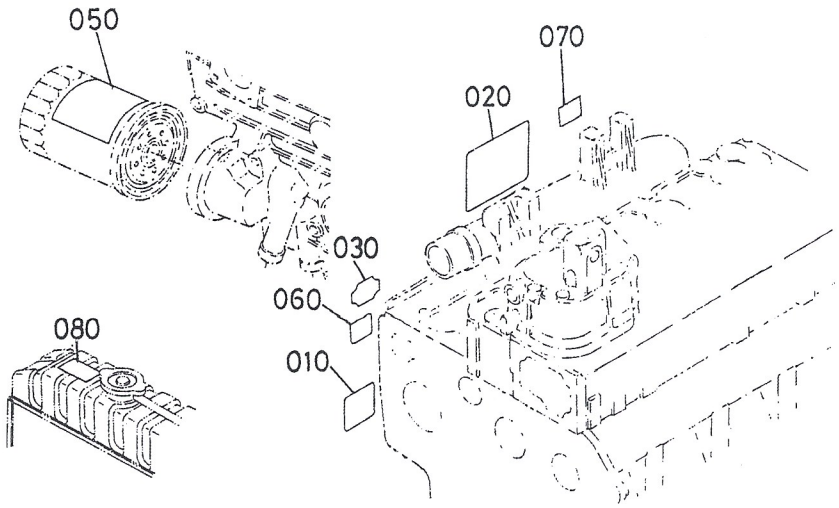

19042-002-10

A:V1902-BG1-PTSI-2

REF. No.	PART No.	PART NAME	Q'TY/S. No.		I. C.	REMARKS
			A	B		
010	15103-9459-0	LABEL, DRAIN CAUTION	1	–		
020	19231-8731-0	LABEL, OIL	1	–		
030	16478-8821-0	LABEL	1	–		
040	----	BLANK	–	–		
050	19242-9440-0	LABEL, CAUTION	1	–		
060	19818-8711-2	NAME PLATE, ENGINE	1	–		
070	19426-8790-3	LABEL	1	–		
080	19426-8788-0	LABEL, INSTRUCTION	1	–		

↔ Interchangeable; ≠ not interchangeable; ← new for old; → old for new

NUMERICAL INDEX

PART No.	PAGE	REF. No.
01023-50618	14	140
	28	110
01023-50620	4	240
	17	140
01023-50628	16	120
01053-50518	16	060
01053-50650	1	210
01073-51032	12	080
01073-51042	12	090
01073-51250	12	110
01123-50818	10	090
	10	160
01123-50820	4	290
	27	040
01123-50822	15	040
	32	030
01123-50825	9	060
	20	110
01123-50828	9	070
	28	070
01123-50832	16	110
01123-50835	27	150
01123-50860	4	090
01123-60814	13	190
01123-60816	2	090
	3	020
	12	070
01133-51028	34	060
01133-51030	24	020
01133-51070	13	230
01153-50812	31	090
01153-50870	4	100
	27	060
01153-50880	4	120
01153-50895	4	140
01153-60830	22	070
01173-51000	22	030
01513-50616	21	040
01517-51028	24	030
01518-50822	28	080
01754-50616	29	010
02056-50060	5	320
	17	170
	21	050
	22	100
02112-50080	17	100
02156-50080	3	040
	15	060
	27	070
	28	100
02156-50080	31	120
02176-50100	22	050
	24	040
03024-50520	18	120
03034-50510	6	050
04011-50100	22	040
04012-50060	16	140
04012-50080	4	160
	16	130
	31	140
04013-60080	17	090
	31	220
04015-60080	22	090
04512-60050	16	070
04512-60060	1	220
	5	310
	16	100
	17	160
	21	060
	22	110
04512-60080	3	050
	4	150
	15	070
	22	080
	27	080
	28	090
	31	130
	31	180
04512-60100	12	100
	22	060
04512-60100	24	050
04512-60120	12	120
04612-00240	13	060
04612-00250	13	200
04717-01600	26	020
04717-02150	27	120
04724-00160	2	070
04811-10300	11	170
04816-00120	17	080
04816-00160	2	100
04816-50300	4	260
	6	140
04817-00150	4	030
04817-00200	4	040
04817-00360	4	050
05012-00408	1	080
05012-00609	1	090
05012-00612	1	100
	4	070
05012-01018	1	110
05411-00420	14	120
05411-00528	31	150
05712-00408	17	070
05712-00410	1	240
05712-00525	13	050
05712-00720	10	070
	11	140
	22	130
07715-00401	10	050
	11	110
07715-03213	4	210
08153-06205	13	030
10244-4232-0	18	030
11173-6302-0	25	080
11173-6313-0	25	240
11197-6307-0	25	030
11197-6308-0	25	020
11197-6332-0	25	220
11197-6338-0	25	100
11460-6311-0	25	130
11460-6312-0	25	160
11460-6327-0	25	120
11460-6350-0	25	040
11460-6353-0	25	050
11460-9331-0	25	170
13963-9201-0	25	210
14182-9203-0	23	250
14301-4275-0	15	100
14311-6050-4	15	080
14681-4201-0	15	090
15000-3608-0	26	010
15021-1424-0	31	210
15021-3366-0	1	150
	6	120
	14	050
15103-9459-0	35	010
15108-4329-0	20	080
15108-4361-0	20	040
15108-4378-0	20	050
15109-7336-0	27	100
15192-7428-2	22	120
15221-0175-0	3	010
15221-0337-0	3	080
15221-0338-0	1	060
15221-0339-0	1	070
15221-0349-0	3	090
15221-1311-0	31	010
15221-1312-0	31	020
15221-1315-3	31	060
15221-1324-0	31	030
15221-1328-0	31	070
15221-1333-0	31	040
15221-1398-0	31	050
15221-1431-0	31	170
15221-1435-0	31	100
15221-1443-0	31	160
15221-1511-0	10	020
15221-1627-0	10	080
15221-1632-0	13	180
15221-2133-0	11	050
15221-2198-2	11	070
15221-2336-0	11	180
15221-2401-0	10	100
15221-2432-0	10	140
15221-2498-0	10	110
15221-3314-0	4	250
	6	130
15221-3365-0	1	120
15221-3370-0	1	160
	3	150
15221-3375-0	2	040
15221-3568-2	1	250
15221-4317-0	20	060
15221-5316-0	19	070
15221-5317-0	19	050
15221-5323-0	19	040
15221-5328-0	19	080
15221-5335-0	19	060
15221-6382-0	12	020
15221-6641-0	16	090
15221-8821-0	17	150
15221-9153-0	27	050
	33	040
15221-9202-0	19	020
15221-9402-0	19	030
15221-9810-0	19	100
15221-9811-0	19	110
15221-9812-0	19	110
15221-9813-0	19	110
15221-9814-0	19	110
15221-9815-0	19	110
15221-9816-0	19	110
15221-9817-0	19	110
15221-9818-0	19	110
15221-9819-0	19	110
15221-9820-0	19	110
15221-9821-0	19	110
15221-9822-0	19	110
15221-9823-0	19	110
15221-9824-0	19	110
15221-9825-0	19	110
15221-9826-0	19	110
15221-9827-0	19	110
15221-9828-0	19	110
15221-9829-0	19	110
15221-9830-0	19	110
15241-3695-0	4	190
15261-9601-0	3	100
15263-1237-0	34	050
15291-4301-0	20	010
15291-4320-0	20	020
15291-7316-0	1	180
15291-8776-0	20	090
15313-0482-0	9	050
15321-2516-3	12	030
15401-0558-0	6	080
15401-6339-0	25	110
15401-6556-0	18	140
15401-9201-0	14	030
15401-9569-0	15	110
15401-9665-0	15	018
15411-0706-0	9	130
15434-0161-3	2	010
15434-1451-0	6	090
15439-5721-0	17	130
15451-9233-0	6	110
15461-6301-0	24	010
	25	010
15465-1231-2	33	010
15469-3361-0	1	140
15469-5371-0	18	060
15469-5372-0	18	070
15469-5373-0	18	080
15469-5374-0	18	090
15469-9701-0	22	140
15471-1452-0	6	100
15471-1601-0	10	030
15471-1615-4	10	040
15471-2201-2	11	060
15471-2231-0	11	090

NUMERICAL INDEX

PART No.	PAGE	REF. No.
15471-2297-0	11	090
15471-2298-0	11	090
15471-2331-2	11	150
15471-2411-0	11	130
15471-3501-2	1	190
15471-5132-0	15	015
15471-5165-2	14	080
15471-5211-0	15	025
15471-5798-0	14	110
15471-7244-0	30	050
15471-7425-0	28	120
15471-9153-0	3	030
15472-5455-0	4	280
15476-0304-3	3	070
15476-0332-0	3	140
15476-8311-0	13	220
15501-7247-0	30	070
15501-8821-0	30	020
15504-5715-0	17	060
15511-6376-0	25	190
15511-9666-0	25	180
15512-9601-0	27	110
15521-0231-0	1	130
15521-0468-0	12	050
15521-0479-0	12	060
15521-0514-0	6	010
15521-0515-0	6	020
15521-0537-0	6	040
15521-0551-0	6	070
15521-0555-0	6	060
15521-0567-0	6	030
15521-0704-0	9	090
15521-0705-0	9	110
15521-1423-0	31	200
15521-1651-5	10	060
15521-2131-0	11	040
15521-2214-2	11	080
15521-2353-0	11	220
15521-2436-0	10	120
15521-2437-0	10	130
15521-3693-0	4	200
15521-5427-0	14	060
15521-5711-5	17	120
15521-5724-0	17	110
15521-6551-0	18	130
15521-7303-5	28	010
15521-7332-0	4	220
15521-7334-0	27	090
15521-7355-0	28	020
15521-9150-0	31	110
15521-9233-0	14	040
15521-9602-0	1	020
15521-9603-0	1	030
15531-7240-2	30	010
15531-7241-0	30	015
15531-7242-2	30	030
15531-7243-2	30	040
15531-7244-2	30	060
15575-7310-0	1	170
15601-0454-0	9	020
15601-0454-0	9	100
	9	120
	9	140
15601-0456-0	9	150
15601-1555-0	10	010
15601-5602-0	16	010
15601-9201-2	17	020
15601-9665-0	17	030
15621-1403-0	31	190
15628-3211-0	2	080
15766-1182-0	32	020
15766-7343-0	28	060
15834-0331-0	3	140
15841-1462-0	17	040
15841-3901-0	26	030
15841-5385-0	18	100
15841-5386-0	18	110
15881-6409-0	23	170
15881-6415-0	23	280
15881-6426-0	23	100
15881-6431-0	23	160
15881-6433-0	23	180
15881-6471-0	23	080
15881-6478-0	23	110
15881-6480-0	23	050
15881-6490-0	23	150
15881-9104-0	23	220
15881-9105-0	23	240
15881-9201-0	23	030
15881-9202-0	23	230
15881-9301-0	23	090
15881-9302-0	23	190
15881-9303-0	23	200
15881-9304-0	23	210
15951-3375-0	2	060
16221-5442-0	17	050
16221-7327-0	27	140
16271-9616-0	1	050
16285-6357-0	25	200
16285-9201-0	25	230
16285-9805-0	25	250
16414-3243-0	7	010
16414-3311-0	4	270
16427-6411-0	23	020
16429-9201-0	33	050
16478-8821-0	35	030
16661-7305-0	28	040
16691-7326-0	27	130
16851-9601-0	4	020
17011-5362-0	18	050
17077-6442-0	22	020
17089-0413-0	4	080
17182-0401-0	4	010
17182-0402-0	4	015
17182-9151-0	5	300
17311-2347-2	11	200
17311-2348-0	11	210
17321-1356-0	3	120
17321-1358-0	3	110
17331-4250-0	18	020
17331-5774-0	14	090
17331-7334-2	27	020
17333-9101-3	2	030
17341-6303-0	25	070
17341-6304-0	25	060
17341-6320-0	25	090
17356-6401-0	22	010
	23	010
17367-9102-0	4	130
17367-9103-0	4	110
17369-6402-0	23	070
17369-6404-0	23	040
17369-6406-0	23	120
17369-6423-0	23	130
17369-6477-0	23	060
17369-6485-0	23	140
17369-6757-0	23	270
17381-6328-0	25	065
17391-9616-0	1	040
19075-0101-0	1	010
19077-5209-2	15	020
19077-5212-3	15	030
19077-9730-0	13	170
19202-0345-0	3	130
19202-0414-0	11	190
19202-0446-0	9	080
19202-0481-0	9	040
19202-0709-0	9	010
19202-2301-0	11	100
19202-2325-0	11	160
19202-2328-0	11	120
19202-2354-0	11	230
19202-2397-0	11	230
19202-2398-0	11	230
19202-3566-0	1	230
19202-4250-0	18	010
19202-5101-0	15	010
19202-5302-0	18	040
	19	010
19202-5361-0	19	090
19202-7270-2	27	010
19207-0436-0	9	030
19212-6310-0	25	140
19212-9713-0	25	150
19222-1621-3	13	210
19222-3641-0	8	010
19222-4328-0	20	070
19223-1176-0	32	010
19231-8731-0	35	020
19237-6591-0	22	170
19242-9440-0	35	050
19274-2105-0	11	030
19274-2109-2	11	030
19274-2111-0	11	010
19274-2191-0	11	010
19416-0461-2	12	040
19416-1157-3	34	040
19416-4343-3	20	100
19426-8788-0	35	080
19426-8790-3	35	070
19434-7301-4	27	160
19439-2111-0	11	020
19439-2191-0	11	020
19449-7250-2	30	080
19808-5641-0	16	160
19808-5642-0	16	170
19818-1602-0	13	010
19818-1617-0	13	020
19818-2425-0	10	150
19818-2501-0	12	010
19818-5115-0	13	040
19818-5409-0	14	010
19818-5410-3	14	020
19818-5506-0	13	120
19818-5526-0	13	100
19818-5527-0	13	110
19818-5528-0	13	130
19818-5534-0	13	160
	16	190
19818-5538-0	13	140
19818-5545-0	13	070
19818-5546-0	13	080
19818-5551-0	13	090
19818-5560-0	13	150
	16	180
19818-5604-0	16	030
19818-5605-0	16	020
19818-5613-0	16	040
19818-5615-0	16	050
19818-5623-0	16	080
19818-5628-0	4	060
19818-5648-0	16	150
19818-5770-2	14	070
19818-8711-2	35	060
19818-9153-0	15	050
19838-6583-0	22	150
19844-5203-0	21	010
19844-5204-0	21	020
19872-6588-0	22	160
1A021-3229-0	4	170
1A021-3515-0	1	200
1A021-5166-0	14	130
1A021-7292-0	27	030
1A021-7333-0	4	230
1A021-7351-0	28	030
1A021-7352-0	28	050
1A091-1235-0	33	030
1A091-1236-0	33	020
1A091-1426-0	31	080
1E017-3365-0	28	045
1G628-5435-0	17	005
1G751-5214-0	21	030
1G780-0162-0	2	020
1G790-3230-2	4	180
1K531-6460-0	23	260
38430-1394-0	34	020
38430-1397-0	34	030
38430-1398-0	34	010
6C090-5896-0	2	050

PIES. No.		EDA0001065
BLOCK No.	LINE No.	A
01	01	19042-11000 V1902-BG1-PTSI-2

KS. M×AK. 0. AK

KUBOTA

THE BASIC NECESSITIES GIANT

"Technology for the Needs of Tomorrow" is the ambition of everyone at Kubota. Through research and the development of new products for agriculture, industry, construction, and many other areas of modern life, we at Kubota hope to realize this goal.

PRINTED in JAPAN